Advisory Visit

River Wharfe, North Yorkshire

Appletreewick, Barden and Burnsall Angling Club

10th March, 2010

Co-sponsored by the Grayling Society

1.0 Introduction

This report is the output of a site visit undertaken by Tim Jacklin of the Wild Trout Trust to the River Wharfe, North Yorkshire on 10th March, 2010. Comments in this report are based on observations on the day of the site visit and discussions with members of the committee of Appletreewick, Barden and Burnsall Angling Club (ABBAC) including Roger Dyson (Chairman), David Fearnside (Vice-chairman), Geoff Walker (Fish rearing manager) and Steve Rhodes (River Improvements co-ordinator)

Normal convention is applied throughout the report with respect to bank identification, i.e. the banks are designated left hand bank (LHB) or right hand bank (RHB) whilst looking downstream.

2.0 Catchment and Fishery Overview

The River Wharfe is a gravel bed river in a glacial valley, rising on Camm Fell in the Yorkshire Dales National Park and flowing for approximately 70 miles to join the Yorkshire Ouse near Cawood. ABBAC control about 7 miles of fishing on the Wharfe in Upper Wharfedale (Figure 1), between Grassington and Bolton Abbey. Upper Wharfedale lies in the Yorkshire Dales Natural Area, where the dominant land uses are pastoral agriculture (mostly sheep), grouse shooting and tourism. Upland sheep farming is the most widespread land use, and whilst it has been practised in the area for centuries both sheep numbers and the intensity of associated management have increased significantly in recent times (70% increase in sheep numbers since the 1950s). Habitats of international importance include limestone pavements; limestone grasslands; blanket bog; upland heathland; 'northern' hay meadow grasslands; and smaller areas of raised bog, fen and open water. A number of species are internationally important and the area is also noted for the bird populations of the moorland and moor-edge. Geologically the area is considered to be outstanding for 'karst' (limestone) landforms, cave systems and exposures of Carboniferous rocks (www.naturalareas.naturalengland.org.uk/Science/natural/profiles/naProfile8.pdf).

The section of river controlled by ABBAC contains trout and grayling. The club stocks trout which are bought as fingerlings from a fish farm and reared on in ponds before being introduced to the river. The abundance of grayling

in the river has declined in recent years, a phenomenon noted by a number of angling clubs up and down the Wharfe. It would be helpful if angling catch records of grayling were maintained, recording the numbers and sizes caught and the angling effort involved (e.g. rod hours).

Not only the numbers but the range of the grayling appears to have reduced; they were formerly known to inhabit the river up to Kilnsey and in the River Skirfare, but are now very rare above Grassington. Linton Falls could be a barrier to upstream recolonisation here.

The Environment Agency stocked 1500 fingerling grayling near Grassington and Hebden in 2008. These fish were reared from grayling of chalkstream origin (River Test). Recent genetic studies on grayling have shown distinct genetic differences between catchments, and the influence of stocking with fish from outside a catchment. To avoid disrupting local adaptations it is recommended that any stocking with grayling is done with fish reared from broodstock taken from the recipient catchment and enough broodstock are used to prevent inbreeding depression.

Similar declines in grayling have been noted on the Nidd, Swale, and Derbyshire Dove. A number of hypotheses have been put forward to explain the decline in grayling including:

- unfavourable river conditions at spawning, during egg incubation, or in the early stages after incubation resulting in poor recruitment perhaps exacerbated by flashier run-off regimes caused by land drainage, increasing areas of impermeable surfaces and climate change
- the impact of increased numbers of piscivorous birds (several goosander were observed during this visit);
- nutrient enrichment and associated algal growths causing increased egg mortality;
- egg predation by signal crayfish which are present in this section of the Wharfe.

It is likely that all these factors are implicated in the decline to some extent. Also, the grayling is a short-lived fish so its numbers are naturally prone to annual variation influenced by the success of recruitment in each generation and changes in populations can become apparent in the short term.

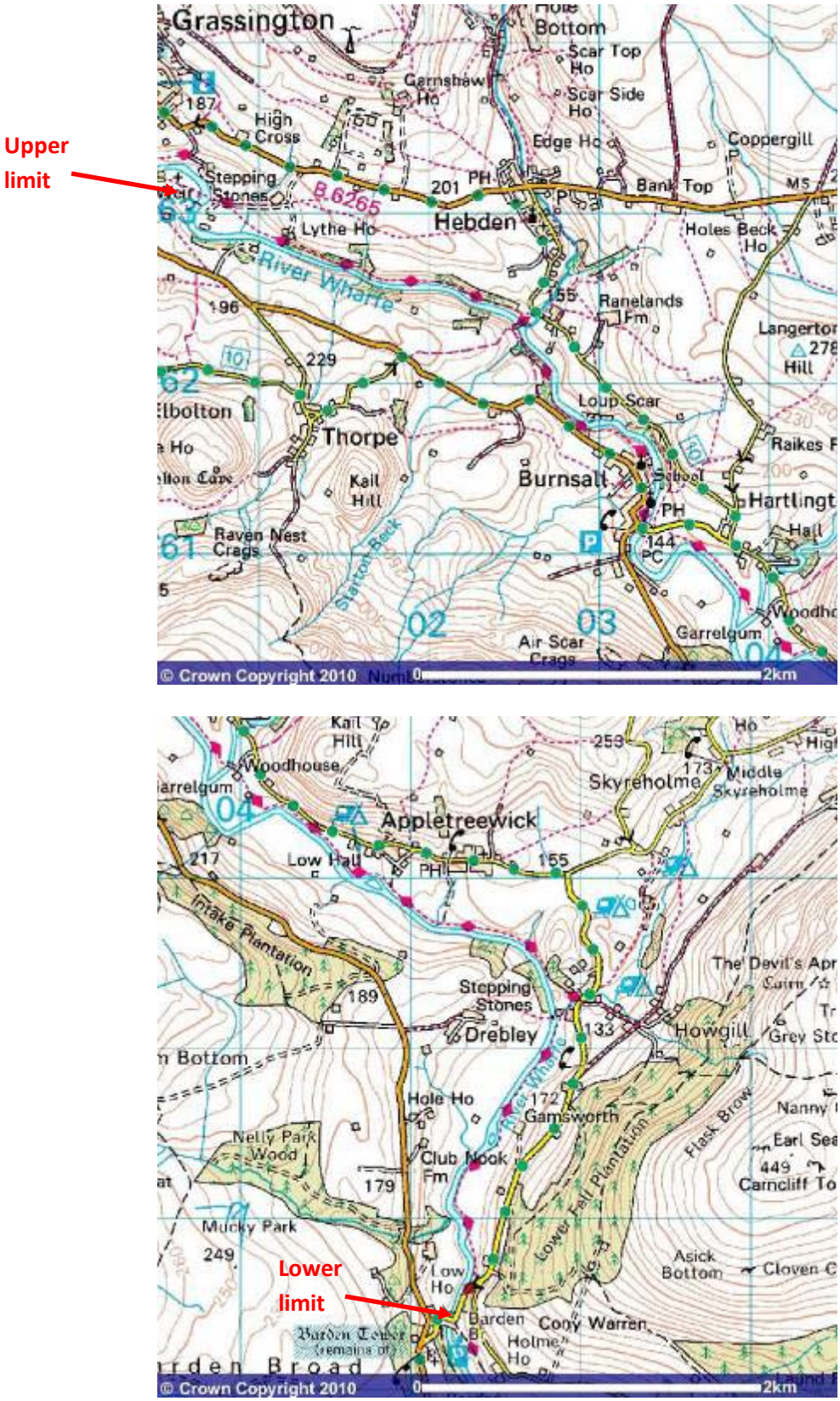

Figure 1 Maps of upper (top) and lower sections of ABBAC waters on the River Wharfe

Images produced from Ordnance Survey's Get-a-map service. Image reproduced with permission of Ordnance Survey and Ordnance Survey of Northern Ireland.

3.0 Habitat Assessment

The visit began at the upstream end of the ABBAC waters on the Lythe House section, which runs from the stepping stones alongside the sewage treatment works down to the suspension bridge. The river here is generally broad and shallow, and the banks are heavily grazed. The main concern of the club is the accumulation of gravel (pebbles) which has in-filled formerly deep pools and glides. Sections of river where it was previously waist-deep are now only calf-depth. Additionally, the river appears to be widening its channel and bank erosion is occurring in a number of areas (Photos 1 – 3).

The processes which lead to the accumulation of sediment are operating on a catchment scale, and involve the availability of sediment from the upstream catchment and how this is influenced by land use, how the sediment is transported, and the shape and gradient of the river channel. As a very broad generalisation, the following stages have occurred influencing the River Wharfe:

- Post-glacial 'wildwood' state with stable banks and flows moderated by vegetation
- Colonisation by man and change of land use, with rapid increase in the intensity of land use in the last 50 years
- Overgrazing, moorland gripping, forestry and recreation increases run-off, bank instability and erosion leading to wide, shallow river channels, increased quantities of mobile sediment, and increased frequency of floods and low flows.

The gravels supplied to the Wharfe are generated during extreme rainfall events and originate from the gills and hillsides of the Dales. The gravels are transported downstream during floods, but the rate at which this occurs depends upon the rate of supply of the gravel – the more that is supplied, the slower it moves (a gravel 'traffic jam'). Therefore, the situation on the Wharfe is a large supply of gravel from the upper catchment which the river is unable to move quickly; hence it is deposited where the gradient lessens (from Buckden downstream).

Photo 1 Wide featureless glides shallowed by gravel deposition

Photo 2 Bank erosion exposing tree roots

Photo 3 Heavy grazing is evident on the right bank

Photo 4 A fallen tree provides some in-stream habitat variation

Certain areas of the river are less able to transport gravel, for example where the channel is sinuous or wide, so more deposition occurs; the Lythe House section appears to be such an area. This contrasts with the Loup Scar section immediately downstream where the river is in a limestone bedrock gorge and is steeper and narrower and there is little gravel deposition. The natural response of a river to sediment deposition is bank erosion, as the river attempts to create a new channel at a lower elevation. Rivers with a high sediment supply therefore tend to migrate across the floodplain, and this explains the widening of the channel seen at Lythe House.

The Upper Wharfedale Best Practice Project was carried out between 1998 – 2002 and further information on this can be found in a series of information leaflets at www.therrc.co.uk/rrc_river_projects1.php?csid=41 . Leaflet No.4 contains more detailed information on gravel supply and deposition, as does the paper at www.therrc.co.uk/pdf/References/Lane_2006.pdf. Leaflet No.6 has information on work carried out such as moorland grip blocking, gill habitat regeneration, riverside fencing and tree planting, and river channel rehabilitation.

The above information (Leaflet No.4, and Lane, 2006) describe the attempts to manage gravel supply in the Wharfe using a gravel trap installed in 1985 near the Cray Beck confluence. This was eventually abandoned because of the high cost of gravel removal, lack of maintenance and subsequent undermining of bank protection works. An alternative gravel management plan is described, involving targeting the source of the sediment supply in the upper catchment by changing land use in these areas (planting native woodland to stabilise sediments). It is not clear what progress has been made on this issue since then, although this more recent BBC report touches on the issue: http://news.bbc.co.uk/1/hi/sci/tech/7657910.stm. Lane (2006) refers to research showing that almost no sediment from the upper catchment gets beyond Starbotton, largely due to the legacy of a major land slip in the 1600s that effectively blocks the valley. It could be that the source of sediment affecting ABBAC waters is therefore downstream of Starbotton. It would be worth discovering the source of the sediment and exploring the possibility of stabilising it with the targeted native woodland planting referred to by Prof. Lane (through Yorkshire Dales Rivers Trust?).

The gravel accumulation on the Lythe House stretch has reduced its value as a fishery. The large areas of uniformly shallow and wide water with very

little cover will hold few fish. There is the occasional area where some woody debris (Photo 4) or boulders placed by the club provide some variety, but this is the exception rather than the rule. It is possible to introduce some variation to this reach with boulders, woody debris and by reducing grazing pressure on the river margins (see recommendations), but this is treating the symptoms rather than the cause of the problem. Further investigation by a qualified river geomorphologist into the source of the gravel, the factors controlling its deposition in this locality and the influence of interventions such as bank protection is recommended. Supporting catchment-wide organisations such as the Yorkshire Dales Rivers Trust (www.yorkshiredalesriverstrust.org.uk) and raising the profile of the issue through them is recommended.

The river was inspected between the suspension bridge and Burnsall (Loup Scar – cover photo), and also at Drebley (Photo 5). In-stream habitat on both these sections was very good, and it was noticeable that land use immediately alongside the river was less intense, with more trees present. The Hebden Beck and the Fir Beck are tributaries of the main river and appeared to have good spawning and nursery habitat for trout. Such tributaries are very important for trout production and it is recommended that ABBAC undertake some basic walkover surveys of the streams entering their stretch of river to ensure they are accessible to adult fish. Guidance on this can be obtained from the recently published Upland Rivers Habitat Manual (www.wildtrout.org).

The final section of the ABBAC waters inspected was the downstream end, just above Barden Bridge. Here there was extensive erosion on the left bank just above the bridge (Photo 6), and on the right bank near Colonel's Pool (Photo 7). Whilst the erosion may be driven by the sediment supply issues described above, it is undoubtedly exacerbated by the heavy grazing pressure on the river banks. Some fencing has been recently installed on the left bank, and it will be interesting to see what effect this has. Grazing is preventing tree succession on the banks, and there are areas where trees are likely to be lost in the next few years leading to more erosion (Photo 8). Fencing off a generous buffer strip to allow more trees to become established should be a priority in these areas.

Photo 5 The river at Drebley – good in-stream habitat and well-vegetated banks

Photo 6 Bank erosion on the left bank upstream of Barden Bridge (stone pitching evident at the upstream end – left of photo)

Photo 7 Bank erosion near Colonel's Pool

Photo 8 Mature trees likely to be lost in the next few years, leaving the bank exposed to erosion.

4.0 Recommendations

- Consult a professional river geomorphologist about the sediment supply and bank erosion issues on this reach of the Wharfe. Various methods of bank protection could be implemented here, ranging from traditional stone pitching to revetment with natural materials (such as the log-and-Christmas-tree technique, or using root wads – Figure 2). However, it would be prudent to assess what influence these would have on the river and how cost-effective they might be before embarking on such a project. It may be possible to access the services of a river geomorphologist through the Rivers Trust network (Prof. Malcolm Newson is Director of Tyne Rivers Trust). Further information on bank revetment techniques can be found in the Wild Trout Trust advisory visit report for the Wharfe at Bolton Abbey at www.wildtrout.org/images/PDFs/AV2007/wharfebolton%20abbey2007.pdf and in the Upland Rivers Habitat Manual (www.wildtrout.org).

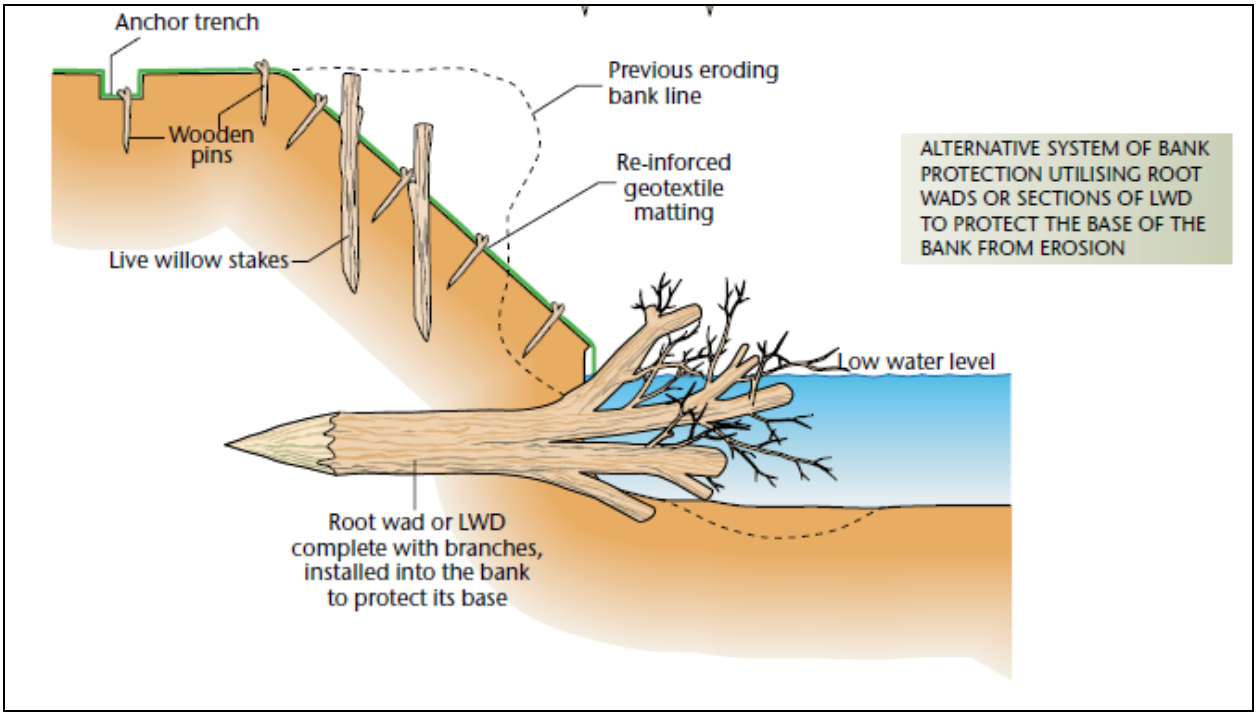

Figure 2

- Create un-grazed buffer strips by fencing alongside the river where erosion is taking place. This should be effective where the bank gradient is relatively shallow (e.g. Photo 7), but will not succeed where block failure of the bank is occurring leaving a vertical earth cliff (e.g.

Photo 6). Some before and after examples of successful fencing projects on the River Eden, Cumbria are shown in Photos 9-12.

The fence line should be placed well back (10 metres or more) from the bank and parallel to flood flows to avoid trash getting caught on wires (causing 'blow-out'). Sacrificial panels should be located where there is a danger of blow out, to minimise damage during floods and facilitate quick repairs (Appendix 2).

There may be opportunities to incorporate buffer strips into agri-environment schemes which encourage farming which is sympathetic to the environment (Appendix 1). The Lythe House section appears to be within an Environmentally Sensitive Area agreement (ESA) which is an old scheme, approaching the end of its 10-year life; this may be an opportune time to suggest fencing if the landowner is considering new schemes.

River Eden, Crackenthorpe, November 1998

River Eden, Crackenthorpe, July 2002

River Eden, Barrowmoor, October 1999

River Eden, Barrowmoor, August 2000

Pictures courtesy of Eden Rivers Trust

- Trees should naturally recolonise the buffer strip, but this could be accelerated by planting cuttings. Low-growing willow species of local provenance would be the most suitable for this, for example goat willow (*Salix caprea*) or grey sallow (*Salix cinerea*).

- On the shallow section at Lythe House there are some opportunities to introduce large woody debris by felling trees on the left bank and attaching them to their stumps with cabled wire to create 'tree kickers' or 'sweepers'. This has been done successfully on the Wharfe at Huby AC.

  A small number of boulders have been placed by the club and have created some localised scour. More boulders are available on the bank, and it would be worth placing these as well. Arranging them in clusters may help increase the amount of bed scour and provide cover for fish (Photo 9). Surface riverbed material should be scraped away before placement to minimise the chance of the boulders creeping downstream.

  Large woody debris (LWD) could be fixed in position to create flow deflectors and create localised scour and depth variation; for example the introduction of upstream pointing flow deflectors made of tree trunks and root wads. The challenge on this section of the Wharfe would be to fix them securely in position given the powerful flood flows, and the nature of the bed substrate (mobile gravel and bedrock). The most secure way is likely to be by digging a trench into the bank and creating a dead-man anchor, with a substantial part of

the structure buried in the bank. Heavy machinery would be required to achieve this.

Photo 9 Boulder cluster on the River Dane, Cheshire

Photo 10 Tree kicker installed on the River Goyt, Derbyshire

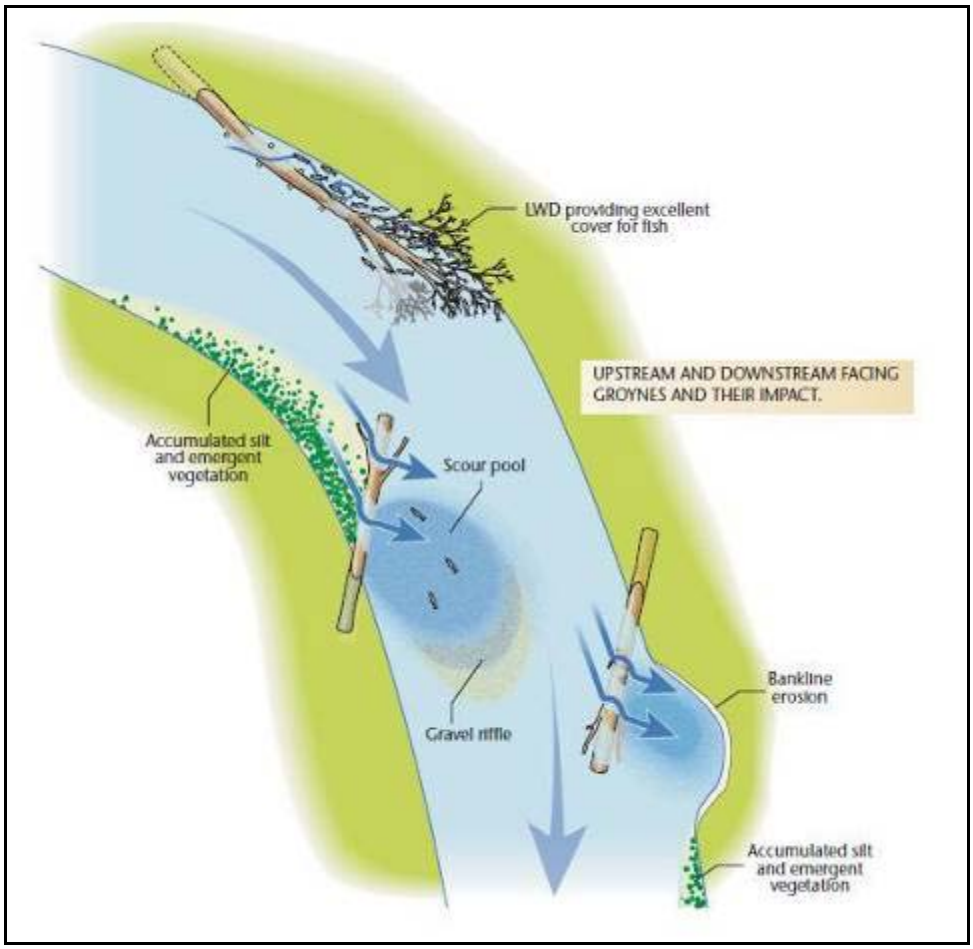
LWD providing excellent cover for fish
UPSTREAM AND DOWNSTREAM FACING GROYNES AND THEIR IMPACT.
Accumulated silt and emergent vegetation
Scour pool
Gravel riffle
Bankline erosion
Accumulated silt and emergent vegetation

Figure 3

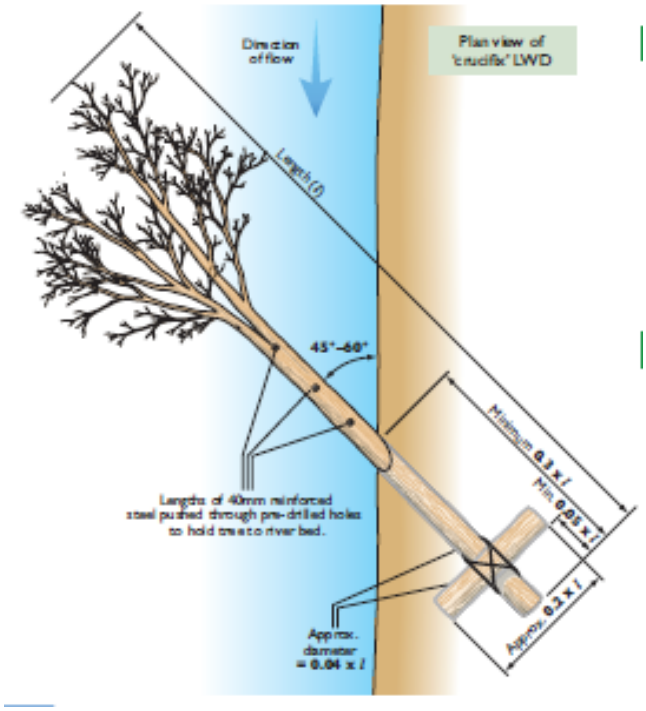

Figure 4

General principles of fixing upstream pointing deflector. Main piece of LWD can be a tree (as shown), tree trunk, or root wad with trunk attached (From STREAM project, www.streamlife.org.uk).

- Continue with the plans to implement the Riverfly Partnership Angler's Monitoring Initiative. This will provide an important indicator of water quality and an early warning of any problems. The fencing of buffer strips and planting of low-growing willows will also benefit river flies by providing better riparian cover for winged stages.
- The club should consider the impact of continuing to stock with fertile farmed trout. Interbreeding between domesticated farmed trout and wild fish leads to lower fitness and survival amongst the offspring, reducing the numbers of river-bred fish in the population. Recent changes to the Environment Agency's National Trout & Grayling Strategy reflect this concern, and by 2015 all farmed trout stocked to rivers will be required to be sterile all-female triploids, or derived from local broodstock. The WTT believes that if stocking is necessary, then it would be sensible to use all-female sterile fish.

The belief that stocking of fertile farmed fish will provide fish capable of contributing to recruitment to the next generation is misplaced. The evidence gathered from dozens of research projects indicates that hatchery-derived stocks often perform poorly in terms of survival.

In itself this would not matter but interbreeding between farmed and wild fish is known to occur and the resulting offspring are of a reduced fitness and far less likely to survive and reproduce within the river system. Capabilities for predator avoidance, food exploitation and fecundity can only be passed on by a process of survival and recruitment over many generations in a particular river environment. Hatchery fish are selected by the fish farmer for growth, health and aesthetics and most fish farm strains have not seen a wild brood fish for many years. The result is often a fish that looks good but is prone to early spawning and poor survival.

An alternative to using triploid stock fish is to take broodstock from the river for a hatchery programme. This is a difficult and risky process with problems such as:

- Catching sufficient broodstock and keeping them alive to maturation; the Environment Agency recommend a minimum of 25 pairs to avoid genetic bottlenecking (released and replaced with different fish annually);
- Judging whether the hatchery process results in more fish in the river compared with leaving the broodstock in place to spawn naturally;
- Avoiding the unconscious selection process that occurs in wild broodstock programmes resulting in significant genetic changes and compromised survival of the offspring, even in the first generation.

The WTT believes that local broodstock schemes should only be used as a method of restoring a population that has been badly damaged, and only then when the bottlenecks impacting them have been removed (e.g. lack of suitable habitat for all life stages). If bottlenecks are not addressed, stocking with fertile fish will bring no benefit to the wild trout population.

It is a legal requirement that all the works to the river require written Environment Agency (EA) consent prior to undertaking any works, either in-channel or within 8 metres of the bank.

5.0 Making it Happen

The WTT can provide further assistance with help in preparing a project proposal and Land Drainage Act consent applications. A Practical Visit may be available to demonstrate habitat improvement techniques. There is currently a big demand for practical assistance and the WTT has to prioritise exactly where it can deploy its limited resources. The Trust is always available to provide free advice and help to clubs, syndicates and landowners through guidance and linking them up with others that have had experience in improving trout fisheries.

6.0 Acknowledgement

The Wild Trout Trust would like to thank the Environment Agency for the support which made this visit possible and the Grayling Society for their support and comments on the draft report.

7.0 Disclaimer

Appendix 1

Agri-Environment Schemes in England

The Common Agricultural Policy (CAP) has spawned a range of agri-environment schemes, with the aim of ameliorating the impacts of farming on nature conservation interests. Over time, the percentage of the CAP that is given to these schemes has increased, under the policy of 'modulation'. Delivery of these agri-environment schemes varies between EU members states. In England the chief mechanisms are as follows:

- Countryside Stewardship (CS) and Environmentally Sensitive Area (ESA) payments. These are old schemes, superseded by the Entry Level Scheme and Higher Level Schemes (see below). However, a number of pre-existing CS and ESA have a few years left to run and can thus still deliver environmental benefit. This type of habitat is of great value for birds and insects, whilst also helping to detain sediment and attenuate surface water run-off.

- Entry Level Stewardship (ELS): This pays a flat rate of £30/ha/year (with the exception of parcels of land >15ha within the moorland line for which a payment of £8/ha/year is made) on achievement of adequate 'points' for the retention and development of environmentally favourable land use over the whole farm. The scheme is open to all farmers and is non-competitive (i.e. all those who reach the target level of points will receive the payment). Agreement is generally for 5 years. Features that qualify for points include the planting of wild bird cover and nectar rich seed mixes, creation and maintenance of buffer strips, and the development of beetle banks. An Organic Entry Level Stewardship (OELS) scheme is also available.

  www.naturalengland.org.uk/ourwork/farming/funding/es/els/default.aspx

- Higher Level Stewardship (HLS): Higher Level Stewardship (HLS) aims to deliver significant environmental benefits in high priority situations and areas. It involves more complex environmental management, so land managers will need advice and support. HLS is usually combined with ELS or OELS options, but unlike these, entry into the scheme is discretionary. A wide range of management options are offered, which are targeted to support key features of the different areas of the

English countryside. HLS agreements are for ten years and can include payments for capital items such as hedgerow restoration.

Natural England has produced a set of targeting maps to increase the environmental benefits delivered through HLS. The targeting maps are the first systematic joining together of information on biodiversity, landscape, natural resource protection, public access and historic interests. Natural England is actively seeking applications in target areas, and for key interest features outside these areas.

www.naturalengland.org.uk/ourwork/farming/funding/es/hls/default.aspx

Catchment Sensitive Farming (England Catchment Sensitive Farming Delivery Initiative)

The Catchment Sensitive Farming (CSF) programme aims to develop measures to tackle diffuse water pollution from agriculture (DWPA) to meet Water Framework Directive requirements. CSF promotes land management that keeps diffuse emissions of pollutants to levels that are consistent with the ecological sensitivity and uses of rivers, groundwaters and other aquatic habitats, both in the immediate catchment and further downstream. Farmers are encouraged to adopt best practice over a range of issues, including the use of fertilisers, manures and pesticides; to promote good soil structure to maximise infiltration of rainfall and minimise run-off and erosion; to protect watercourses from faecal contamination (e.g. with fencing and livestock crossings), and from sedimentation and pesticides (e.g. with buffer strips) and to reduce stocking density or grazing intensity.

The CSF programme takes forward the Government's strategic review of DWPA in England, by promoting voluntary action by farmers in 50 priority catchments to tackle the problem of DWPA. A list of these catchments can be found at http://www.defra.gov.uk. CSF officers have been appointed for each catchment. They are imbedded with DEFRA, the Environment Agency or Natural England, and can be contacted for advice at the relevant local office.

The recently launched Campaign for the Farmed Environment is a voluntary agreement with the aim of replacing ecologically valuable land that was lost as a result of the abolition of set-aside. Farmers are encouraged to farm parcels of land so as to optimize their ecological value. Management options include the creation of wide buffer strips, game cover, and over-wintered stubbles. If this voluntary approach proves not to be successful, legislation to enforce these changes is expected in 2012.

Appendix 2

River-side fencing – guidance (courtesy of Will Cleasby, Eden Rivers Trust)

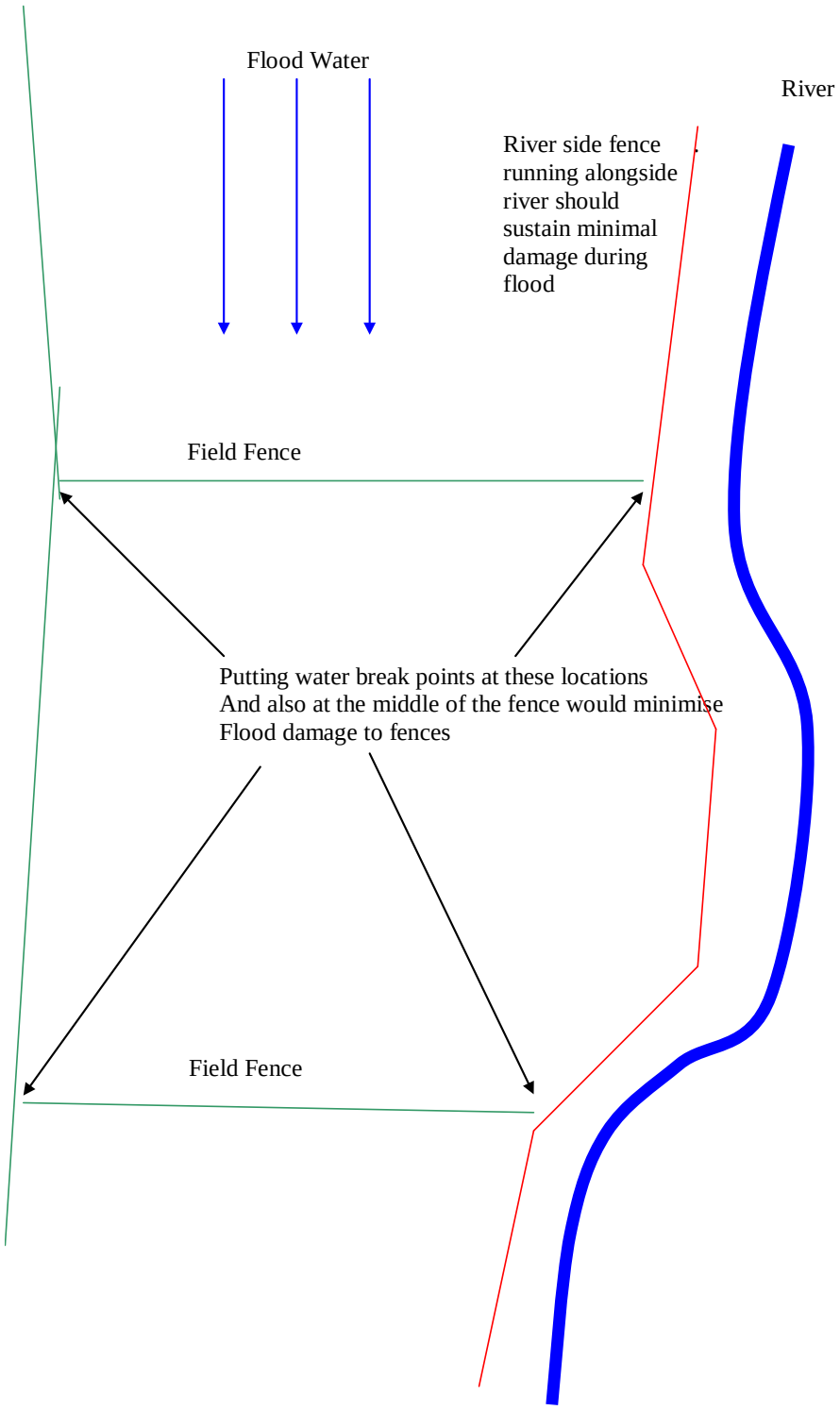

Details for setting up water break points to separate one fence into two

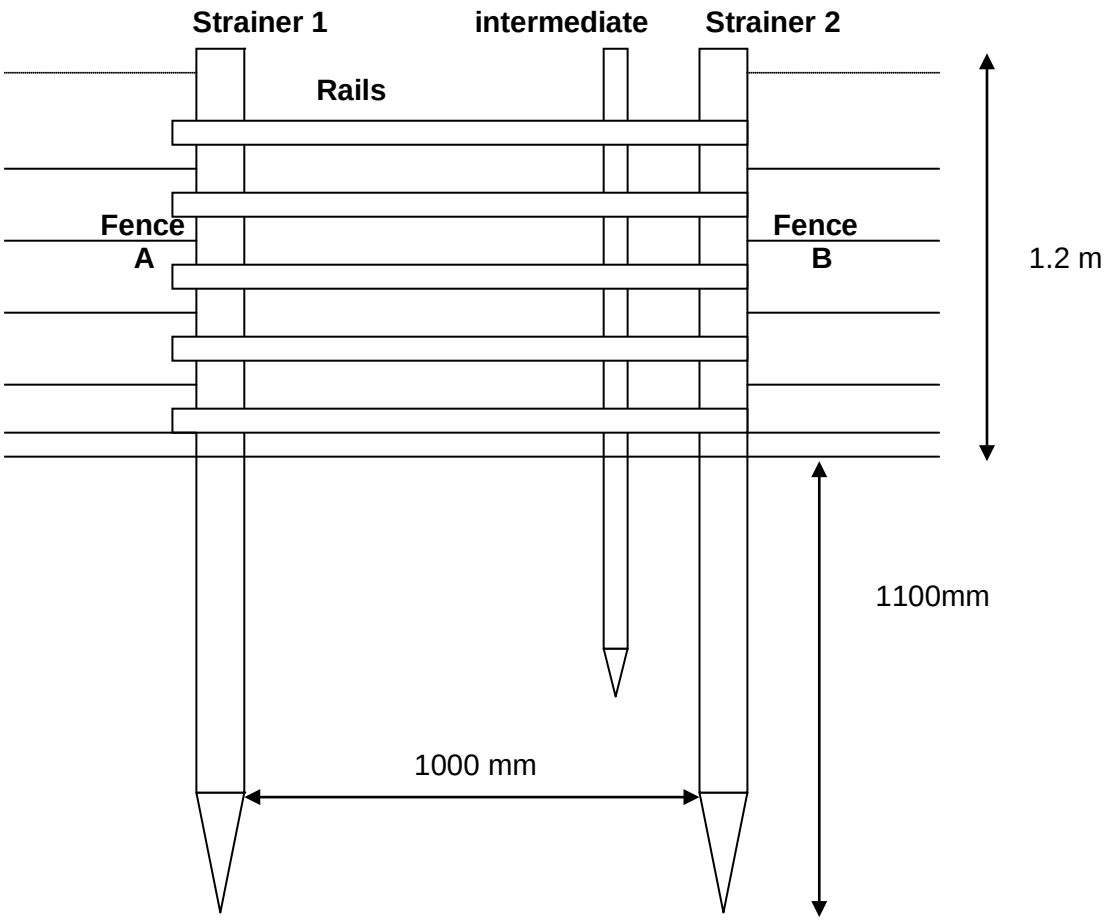

Water Break Point:

- Straining posts 1 and 2 set at approx 1m apart
- Intermediate post set 200mm of strainer 2
- Rails are nailed to strainer 1 and intermediate post
- Rails sit flush to strainer 2 but not attached to it

Example:

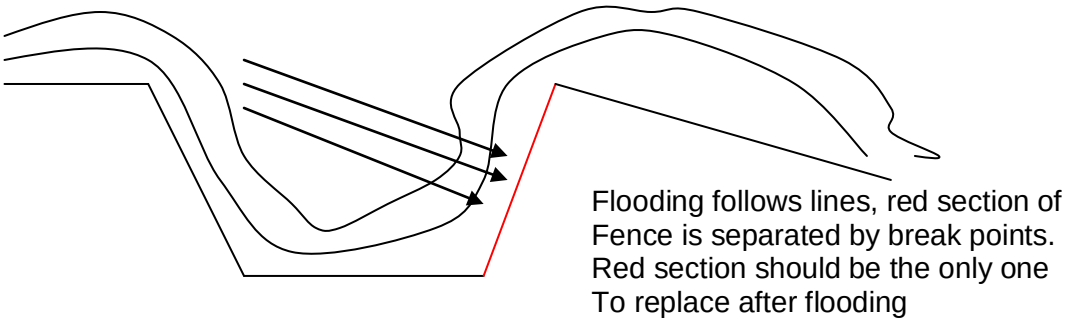

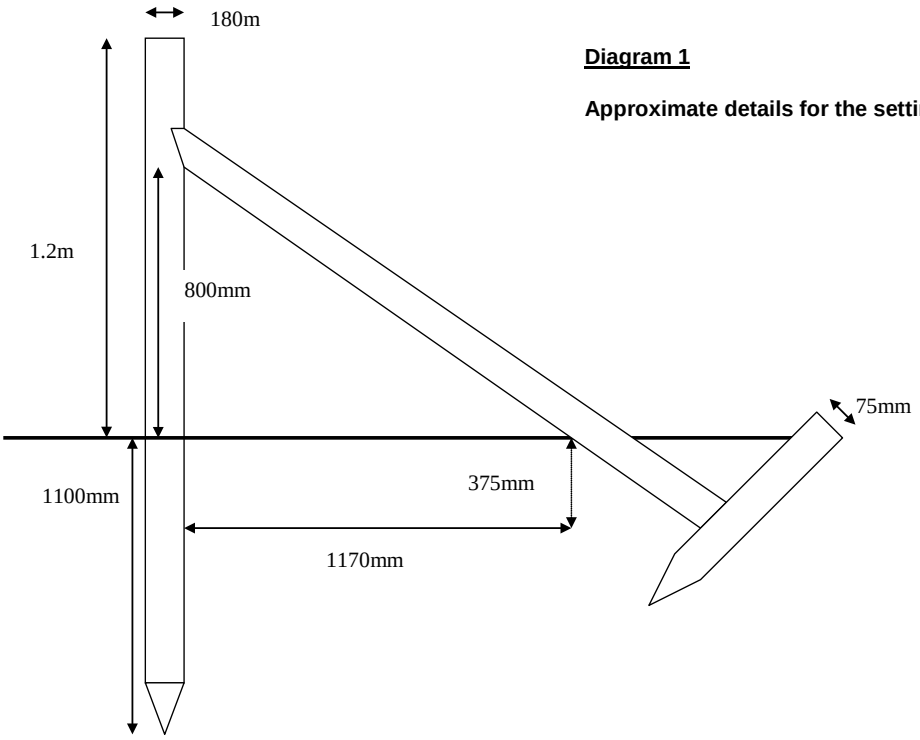

Diagram 1

Approximate details for the setting up of the strainer

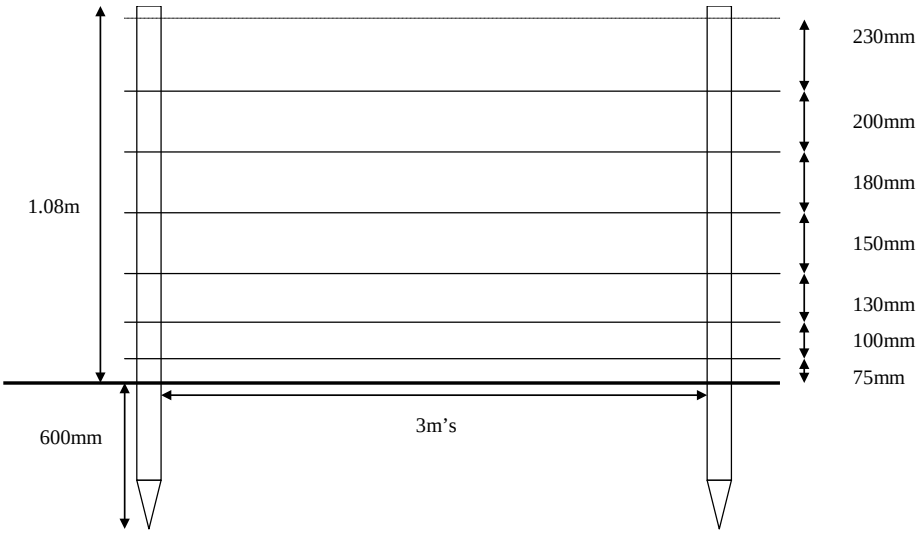

Diagram 1

HIGH TENSILE.

6 STRAND HIGH TENSILE
1 STRAND BARBED WIRE

High tensile wire (diagram 1)

- Shall not be less than 1.06m high from ground to top wire.
- Wire shall be galvanised (BS4102), 3.15 mm diameter.
- Straining Posts shall be 180mm minimum top diameter x 2.4m's to be driven into the ground.
- Strainers to be set at centres not exceeding 50m's.
- Turning posts shall be 155mm top diameter x 2.1m's. May be pointed and driven to 900mm into the ground.
- Struts shall be 120mm dia x 2.1m long and notched into the straining post at an angle no greater than 45 degrees. Allow two struts for strainer/turner where angle is less than 135 or one bisecting the angle where the internal angle is greater than 135.
- Intermediate post shall be 75 - 100mm dia x 1700mm to be driven to 450mm. To be set at no more than 3 m intervals.
- Galvanised steel radisseurs to be used to tighten strands.