Advisory Visit

Pickering Beck – Duchy Water

30-08-2011

Introduction

This report is the output of a site visit undertaken by Paul Gaskell of the Wild Trout Trust to the Duchy Water on Pickering Beck on August 30th, 2011. Comments in this report are based on observations on the day of the site visit and discussions with Tony Walsh and Dave Southall of Pickering Fishery Association (http://www.pickeringfishery.co.uk/).

Normal convention is applied throughout the report with respect to bank identification, i.e. the banks are designated left hand bank (LHB) or right hand bank (RHB) whilst looking downstream.

1.0 Catchment / Fishery Overview

The Duchy Water on the Pickering Beck flows over the limestone and calcareous sandstone bedrock of the North Yorkshire Moors to the northeast of Pickering. Bedrock deposits are overlain with a superficial alluvium of clay, silt, sand as well as gravel and the beck runs parallel to the North Yorkshire Moors Railway line for much of its course upstream of Pickering. Below the town of Pickering, the Pickering Beck merges with Costa Beck close to Kirby Misperton, that in turn merges with first the Rye and then the Derwent close to Wykeham. Much of the river upstream of Pickering enjoys a conservation designation as a Site of Special Scientific Interest (SSSI) and also falls within a Catchment Sensitive Farming priority catchment. Furthermore, the catchment is also the beneficiary of a novel flood risk management scheme instigated in 2009 at a cost of around £700K. The project seeks to use land management techniques to increase the time taken for rainfall in the upper catchment to reach the housing and urbanised sections of the downstream catchment (http://www.environment-agency.gov.uk/news/105562.aspx). Consequently, there is widespread support for the addition of features into the river channel that increase its hydrological roughness – a great boon for habitat improvement measures.

The Pickering Fishery Association looks after the fishing on the Duchy Water and its wild trout and grayling. The Duchy water is retained as a wild fishery with no supplementary stocking. Their membership is limited to 120

individuals and also provides fishing on the Costa Beck, Thornton Beck (also preserved as an exclusively wild trout fishery) and Oxfolds Beck.

The land use around the Duchy Water is dominated by a mixture of coniferous forestry and deciduous woodland (with some grazed pasture in the lower reach upstream of Pickering itself). In terms of its designation under the Water Framework Directive, the fishery is captured as a single waterbody from its source down to the confluence with the Costa Beck (Waterbody ID: GB104027068470). Due to flood risk management measures, this waterbody is designated as "heavily modified" and its current ecological status is deemed to be "moderate". The waterbody is designated as "high" quality for chemical parameters and all biological parameters except fish – for which it scores "poor". Identified mitigation measures and their current status of completion or incorporation taken from the River Basin Management Plan are given here (Table 1).

Table 1: Mitigation Measures that have defined Ecological Potential

Mitigation Measures	Mitigation Measure Status
Selective vegetation control regime	In Place
Appropriate channel maintenance strategies and techniques - woody debris	In Place
Appropriate channel maintenance strategies and techniques - minimise disturbance to channel bed and margins	In Place
Appropriate timing (vegetation control)	In Place
Appropriate vegetation control technique	In Place
Removal of hard bank reinforcement / revetment, or replacement with soft engineering solution	Not In Place
Preserve and, where possible, restore historic aquatic habitats	Not In Place
Flood bunds (earth banks, in place of floodwalls)	Not In Place
Set-back embankments	Not In Place
Improve floodplain connectivity	Not In Place
Structures or other mechanisms in place and managed to enable fish to access waters upstream and downstream of the impounding works.	Not In Place
Remove obsolete structure	Not In Place
Operational and structural changes to locks, sluices, weirs, beach control, etc.	Not In Place
Educate landowners on sensitive management practices (urbanisation)	Not In Place
Sediment management strategies (develop and revise)	Not In Place

Appropriate techniques to align and attenuate flow to limit detrimental effects of these features (drainage)	Not In Place
Preserve and where possible enhance ecological value of marginal aquatic habitat, banks and riparian zone	Not In Place

2.0 Habitat Assessment

Starting at the lower limit of the inspected reach at SE 81385 85737 (national grid reference), the only example of grazed pasture is pictured (Fig.1). This is proposed to be the site of a future floodwater storage scheme with increased connectivity of the river to its floodplain and inclusion of floodwater retaining bunds in the surrounding pasture.

Figure 1: Pasture scheduled for floodplain floodwater storage scheme. The river follows the treeline to the right of frame. The border between trees in the background and the grass represents the upstream limit of grazing pasture on this reach.

A single line of trees provides a nice mixture of light and shade along both banks, but could possibly benefit from a little variation in the height of the

canopy. The presence of grazing is also likely to prevent succession of tree seedlings at the current time (Fig. 2).

Figure 2: Single line of trees bordering both banks of the river in the pasture reach

It might be desirable to either "hinge" or cut through and cable some of the bankside trees such that their crowns lay in the river channel margins, parallel to the flow direction. This would provide a little variety in the surrounding tree canopy, but also be a simple way of improving in-stream cover for fish (as well as hydrological roughness). Such cover is lacking to a degree in this section (due to the grazing regime). Depending on future plans for livestock presence/absence or overall densities in the surrounding pasture, it may be desirable to exclude grazing of a marginal "buffer strip" of vegetation. However, any fencing design would need to be compatible with floodwater storage schemes and the attendant inundation regime of the flood plain. For example, top-hung panels or batons threaded onto tensioned wires between fence posts (or sacrificial panels separated by "water break points" – Appendix 1) could be used in strategic locations to minimise flood damage to fencing. The fencing design should be explicitly incorporated in the floodwater storage scheme. Contacting the managers of this scheme to

open the dialogue on the design of fencing is a necessary first step. Whilst some riffle habitat occurs intermittently in this reach, the intervening glide or pool habitat is generally quite uniform in terms of depth, current pace and bed material. There are good opportunities to increase the amount of structural variety present on the stream bed (e.g. via installing securely pinned "root wads" in some of the long glides (Fig. 3). Additionally, installation of securely cabled "log jam" structures would encourage stream bed scour to form mid-channel pool habitat for adult fish (with attendant spawning gravel mounds deposited downstream). This could augment the naturally occurring example of a coarse woody debris dam found in this reach (Fig. 4). Overall, this section would benefit a little from increased instream structure (logs, root wads and tree crowns) – both to provide physical cover and also to increase the amount of riverbed scour and deposition. Such structural variety will help to mitigate the relatively abundant sandy river bed present in this area (derived from the sandy soils of the riverbank and drainage measures for land in the upper catchment). By encouraging adjacent patches of sediment accumulation and bed scour, installed structures can help preserve a variety of river bed material types that are preferred by different invertebrate species and varying life stages of fish (including trout).

Figure 3: Root wad cover pinned into the riverbed in a scattered arrangement would help to increase the adult fish holding capacity of this reach. Forestry on the LHB could provide a ready supply of raw material

Figure 4: Natural debris accumulation - great habitat for the bugs that trout feed on and excellent cover for fish. Pool habitat creation is also promoted by the bed scour generated by cross-channel logs/attendant debris accumulation.

Progressing further upstream into the reaches that are much more heavily forested on both banks, the river produces a more pronounced series of meanders. Several factors are acting in combination here. First of all, the river flows at a lower gradient here than that of the bottom section of the beat. Secondly, the soft soil is readily erodible – even with the presence of mature trees and their root systems. Thirdly, until the completion of various schemes to block moorland drains and other measures to reduce the intensity of spate flows, many spates will be highly erosive. The meanders and presence of natural (as well as installed) examples of woody debris combine to produce good adult pool habitat. However, the large inputs of sandy sediment through erosion of the banks do limit the potential for good quality spawning habitat throughout this reach. The existing measures put in place by Pickering Fishery Association working parties' make excellent use of the bank stabilising (and flow reducing) characteristics of marginal brash and tree placements (Fig. 5). Where there are opportunities to extend such work on the outside of the very rapidly eroding banks, it will help to slow (not

eradicate!) the rate of erosion – especially if some tree management can be undertaken to encourage bank-top vegetation growth.

Figure 5: Parallel placement of marginal brashy material installed by Pickering Fishery Association is a great "soft engineering" technique to slow erosion as well as brake the downstream progress of floodwater. It also provides excellent cover for juvenile fish and a range of invertebrates.

Currently, the club is limited by physical capacity to both the volume of work and the size of woody materials that are feasible to tackle. Furthermore, the considerable depth of water within some sections of this reach makes manual work within the channel impossible. However, the clear benefits of the excellent existing works (Fig. 6) and naturally occurring debris (Fig. 7) show the great potential of pursuing all safe and feasible opportunities. In fact, the location pictured in Figure 7 is probably the best overall example of high quality habitat encountered during the site visit.

The other feature common throughout much of the river upstream of the lower pasture is very dense mature tree cover (Fig. 8). This extends right up the valley sides on both river banks in places and provides mostly a uniform, dense shade. Ideally a programme of rotational coppicing (using the arising

material for in-stream habitat structures) would be undertaken to introduce a more staggered age structure, canopy density and height distribution of trees. Something closer to the density illustrated in Figure 9 would be a reasonable benchmark to aim for.

Figure 6: Great marginal habitat created by working party efforts

Figure 7: Fantastic habitat created by combined deposition, erosion, and cover effects of natural woody debris. The best habitat encountered during the whole visit. The fallen trees have also provided the right balance of light and shade.

Figure 8: Dense, uniform shading that extends for the majority of the forested reaches

Figure 9: Some recent felling work indicates a fair benchmark for the appropriate extent of coppicing

It is important to note that there will still be great value in retaining some sections of near total shade. These tunnelled sections will provide crucial cool refuge areas during periods of low flow and high temperatures.

3.0 Recommendations

The first recommendation probably counts as more of a commendation – and that is to continue the excellent programme of sensitive and effective existing works. The marginal brashy cover installation is providing excellent habitat as well as flow-regime and erosion control benefits. However, there are opportunities to produce additional adult scour pool habitat (with concomitant improvements to condition of spawning gravels). To this end:

- Installation of a number of artificial log jams and/or upstream facing "v" flow deflectors are appropriate
- Resist the temptation to remove natural, fallen woody debris in the channel unless it is clearly either highly dangerous or highly unstable (either leave it in place if stable, or safely move and secure it if unstable)

Further enhancements to fish holding capacity would include:

- Scattered root wad pinning into glide and pool habitat
- Scattered log pinning into pool tail habitat
- Tree hinging or felling and cabling to provide more substantial overhead cover and erosion control benefits (as well as juvenile fish shelter and fine sediment "filtering" and accumulation)
- Grazing exclusion (if relevant) via fencing that is compatible with future floodplain connectivity and floodwater storage schemes

In order to help to promote a more varied plant and animal community in and immediately surrounding the river within the densely forested reaches:

- A programme of light rotational coppicing (potentially incorporating tree hinging as required) is recommended. Ideally, softwood species would be clear felled and replaced by planting suitable hardwood species. Selected hardwood trees could then be coppiced on a rotational basis to maintain diversity in canopy height and density. It is worth investigating whether any local financial incentives exist for changing from softwood to hardwood forestry (particularly given SSSI status and existing adjacent ancient woodland).

- The arrangement discussed during the visit to use horse-drawn lumber transport to manage the material arising from coppicing for use in habitat works is an excellent proposition

All of the above measures are aligned with the objectives of existing initiatives that aim to improve and protect both the ecology (Water Framework Directive designations, surrounding SSSI status and CSF priority catchment) and floodwater storage capacity (Defra pilot schemes for Pickering and Sinnington) of the catchment. Furthermore, the failing status of the water body for fish populations can be discussed with local Environment Agency fisheries staff and the precise shortfalls identified. It will be valuable to establish whether the Duchy Water falls into an existing fisheries action plan and to identify opportunities for effective partnerships in achieving any prescribed remedial measures. Contacting your local fisheries officer will be an important first step to clarifying these issues and identifying opportunities to work in partnership with the Environment Agency.

4.0 Making it Happen

Although the overall principle of increasing channel roughness is supported by flood risk management personnel (and the Duchy water is designated as non-main river), it is necessary to clarify in writing exactly what limits exist for permitted in-stream structure installation. Additionally, because of the SSSI designation and forestry interests, permitted levels and practices for tree management must be established with all relevant parties. Making contact with the local wildlife trust may be a short cut to establishing the required contacts for each relevant interested party (from the appropriate Natural England representative, to landowners and forestry operators).

Establishing the availability of funding for works that contribute to the initiatives will be important. This applies to both habitat improvement under the Water Framework Directive and the pilot works to increase floodwater storage capacity. Subject to suitable availability and scheduling, it may be possible for the WTT to offer a Practical Visit in support of the advice provided in this report. Practical Visits typically run for between one and three days and include the permanent installation of works by way of demonstration. In the case of the Duchy water, this could include:

- Leading local arboricultural contractors in marginal tree management for improving river habitat (i.e. hinging and cabling)
- Helping to set a plan for the extent and frequency of future rotational coppicing for light/shade regime management
- Overseeing the construction and installation of in-stream structures arising from tree management (in combination with horse-drawn transport of large woody debris)

The WTT has a funding officer who can help with identification of supporting funding streams for projects (Denise Ashton; dashton@wildtrout.org). Please contact Denise if additional help is required in securing funds. The basic materials and staff time for practical visits can be sponsored by the WTT up to a value of £1800 – again subject to availability.

5.0 Acknowledgement

The WTT gratefully acknowledges the funding support provided by the Environment Agency for the Advisory Visit programme. We also greatly appreciate the travel cost donation made by Pickering Fishery Association and the kind hospitality of the visit hosts.

6.0 Disclaimer

Appendix 1

River-side fencing – guidance (courtesy of Will Cleasby, Eden Rivers Trust)

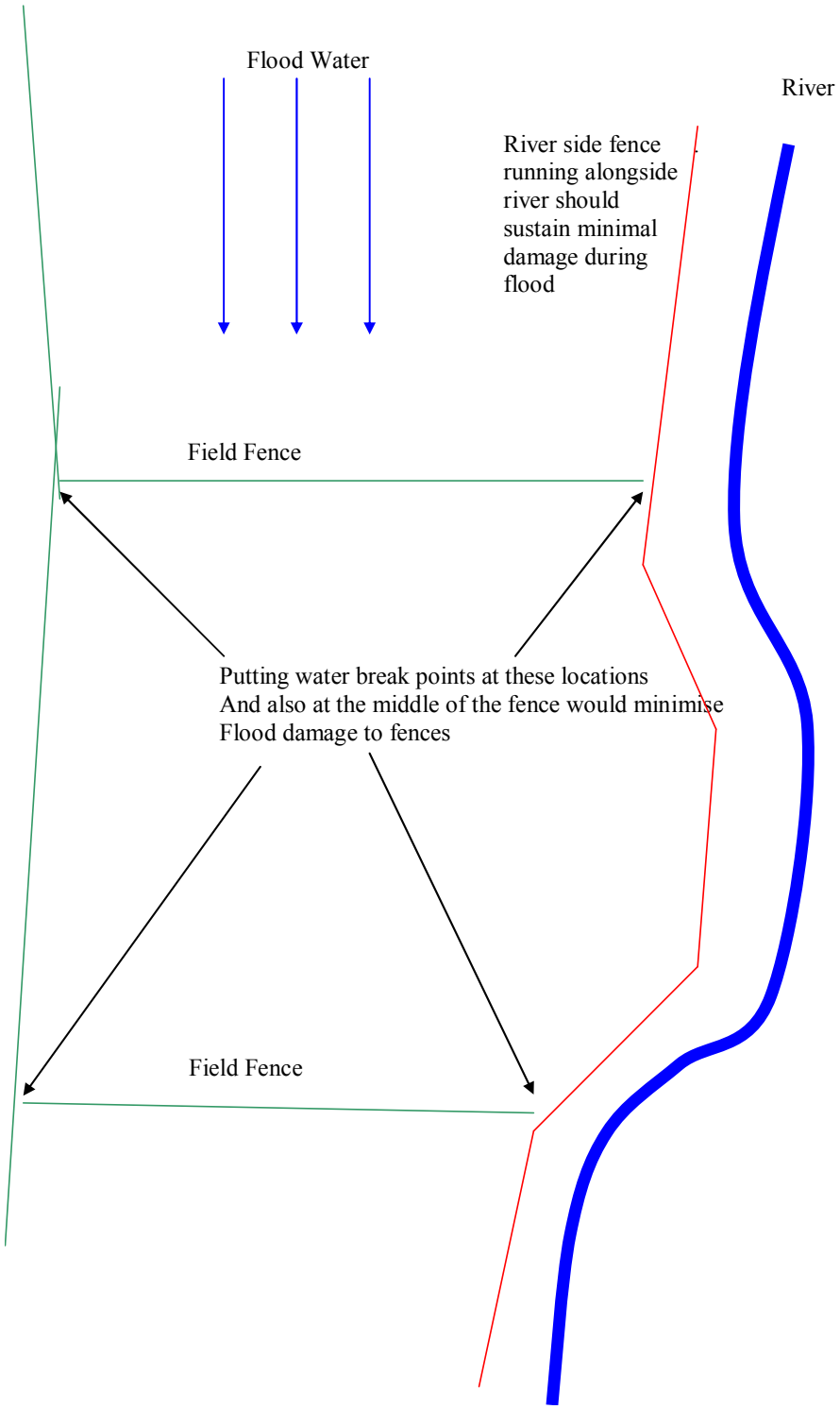

Details for setting up water break points to separate one fence into two

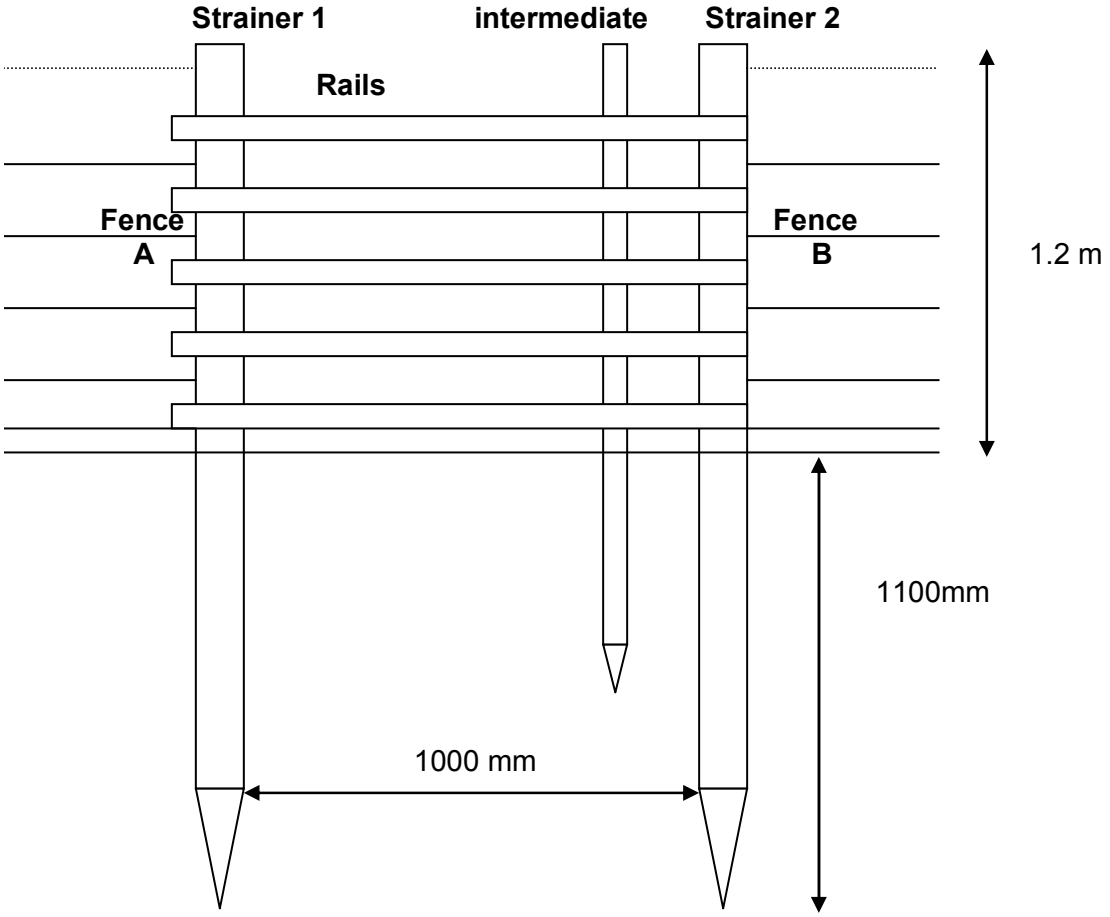

Water Break Point:

- Straining posts 1 and 2 set at approx 1m apart
- Intermediate post set 200mm of strainer 2
- Rails are nailed to strainer 1 and intermediate post
- Rails sit flush to strainer 2 but not attached to it

Example:

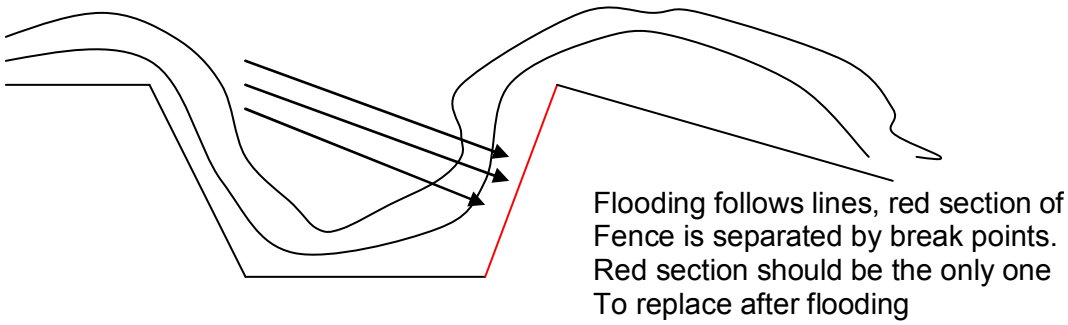

Approximate details for the setting up of the strainer

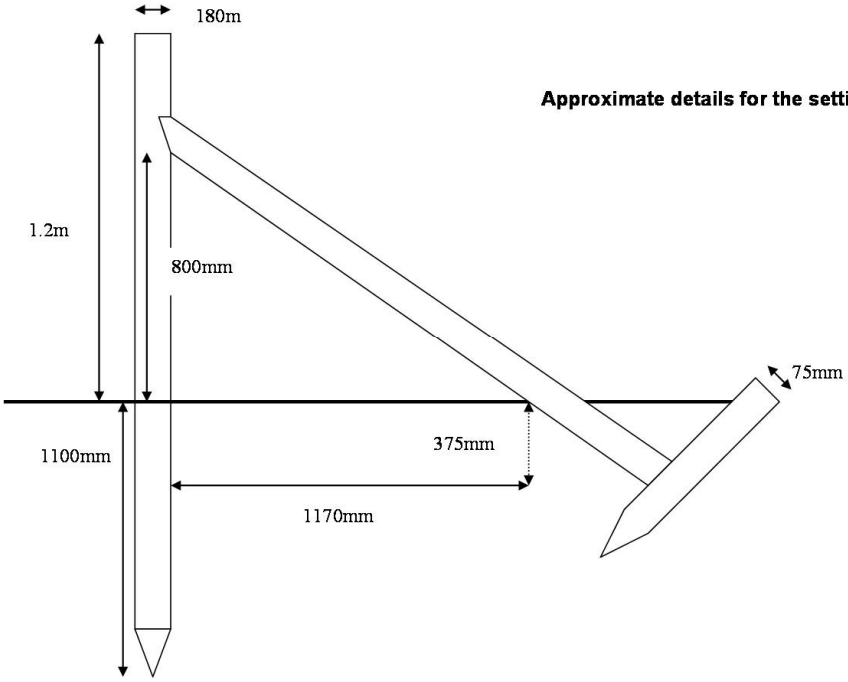

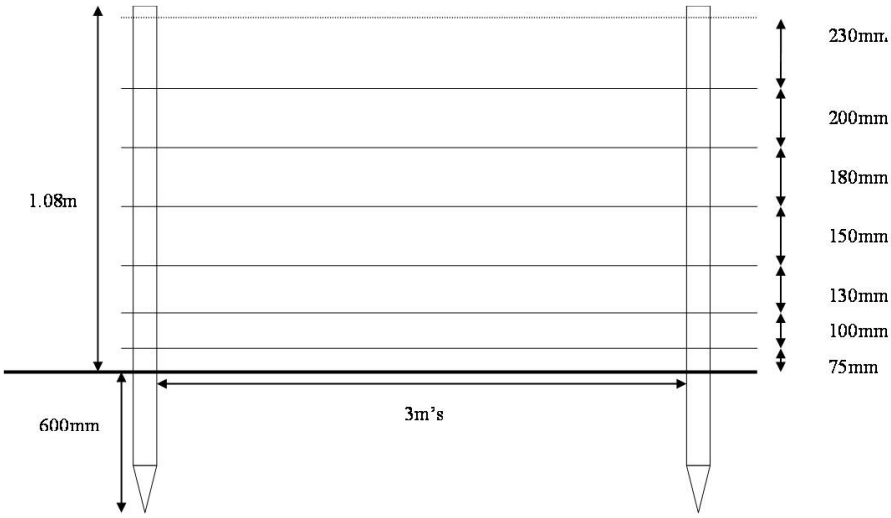

HIGH TENSILE.

6 STRAND HIGH TENSILE
1 STRAND BARBED WIRE

High tensile wire

- Shall not be less than 1.06m high from ground to top wire.
- Wire shall be galvanised (BS4102), 3.15 mm diameter.
- Straining Posts shall be 180mm minimum top diameter x 2.4m's to be driven into the ground.
- Strainers to be set at centres not exceeding 50m's.
- Turning posts shall be 155mm top diameter x 2.1m's. May be pointed and driven to 900mm into the ground.
- Struts shall be 120mm dia x 2.1m long and notched into the straining post at an angle no greater than 45 degrees. Allow two struts for strainer/turner where angle is less than 135 or one bisecting the angle where the internal angle is greater than 135.
- Intermediate post shall be 75 - 100mm dia x 1700mm to be driven to 450mm. To be set at no more than 3 m intervals.
- Galvanised steel radisseurs to be used to tighten strands.