THE INNERMESSAN BURN

A catchment wide assessment of habitat, electrofishing, catch, ecological and chemical data

2009

Contents

1 Introduction

The Innermessan Burn catchment rises in the hills of Balker Moor and Cairnscarrow as the Sheuchan Burn, before flowing through Tongue Glen and discharging into the Black Loch. The Innermessan Burn drains the Little Black Loch and flows approximately 2 km North West to the confluence with the Kirclachie Burn at Craigcaffie Bridge. The burn then flows a short distance before discharging into the sea at Loch Ryan at Innermessan.

The purpose of this survey was to collect fish and fish habitat data on the Innermessan Burn catchment, in order to aid the development of a fisheries management plan for the catchment.

During the summer of 2008, GFT undertook a habitat survey of the Innermessan Burn. The habitat survey was aimed at identifying the various habitats available to salmonid fish and any factors which may potentially limit juvenile production within the catchment.

An electrofishing survey was used to identify the abundance and distribution of juvenile salmon and trout populations. Five sites were selected in the main burn to give a full representation of the different catchment habitats.

To give an assessment of fish health in the burn and lochs adjoining the burn; Stranraer and District Angling Association provided information on previous catches and scale samples from trout caught at the White Loch within the last year.

At the same time, water quality was analysed using historical data provided by the Scottish Environment Protection Agency (SEPA) from the burn and lochs, which were also sampled by the GFT in July 2009. Algal samples were taken from the lochs and analysed by the SEPA Ecology Department. The results of ecological and chemical data are discussed to give a complete representation of all the environmental factors affecting fish health within the Innermessan Burn and lochs at the top of the catchment.

2 Aims Of This Report

The aims of the habitat and electrofishing surveys were:

- To assess the state of habitat in the catchment with regards to salmonid spawning.
- To identify areas of the catchment where the habitat may be limiting juvenile salmonid production.
- To identify areas of the catchment where the habitat could be enhanced to improve juvenile production.
- To monitor the distribution and abundance of juvenile salmonids and other fish species at specified sites within the Innermessan Burn catchment.

The aims of the biological, ecological and chemical data analyses were:

- To provide an overview of fish species utilising different parts of the Innermessan catchment; their current status and relationship with other fish groups within the Black and White Loch.
- To reflect on current and historical water quality as a means of determining fish production and survival within the different water bodies of the catchment.
- To assess the severity of algal infestation and pond weed growth in the White and Black Lochs.

3 Methods

3.1 SFCC Habitat Survey

The Scottish Fisheries Co-ordination Centre (SFCC) developed a habitat survey method that addresses the needs of fisheries managers and researchers. It was specially developed to assess habitat for juvenile salmon and trout and not used to evaluate habitat for other fish species.

The survey methodology takes into account many recording requirements and information gathered about river stretches using SFCC fish habitat survey protocol can be used by trained interpreters and within reason to:

- Evaluate quality of habitat for juvenile salmonids
- Identify the potential location of salmonid spawning gravels
- Identify burn stretches that would be of benefit from habitat improvements
- Target areas for stocking
- Identify and classify point pollution sources
- Identify and grade obstacles to fish migration
- Identify location and type of past channel/bank modifications

Juvenile salmonids have specific habitat requirements. For example, water quality, shelter and feeding territory, availability of food and availability of spawning. Tables 1 and 2 describe some basic habitats for different life stages of salmon and trout. The precise habitat requirements for each species and life stage is extremely complex.

Table 1: Age class habitat requirements of salmonids

Life stage	Salmon	Trout
Eggs/alevins	Golf ball to tennis ball sized substrate.	Dependent on fish size: Golf ball to tennis ball sized substrate for large brown trout and sea trout, pea to golf ball sized material for smaller trout.
Fry	Golf ball to tennis ball sized substrate, fast flowing, shallow broken water.	Golf ball to tennis ball sized substrate, slow to medium flowing shallow water, often concentrated at stream margins.
Parr	Tennis ball to football sized substrate, fast flowing broken water, often slightly deeper than fry.	Variety of substrate, undercut banks, tree roots, big rocks, deeper slower water.
Smolts	Unknown.	Unknown.
Adults	Deep pools.	Deeper areas, sustained flow but not too fast, undercut banks, tree roots, good instream vegetation and large rocks.

3.1.1 Data recording

During the habitat SFCC survey, data is collected on the following to obtain a full review of the suitability of fish habitat along a river system:

- Water depth
- Water flow type
- Instream characteristics
- Bankside characteristics
- Riparian vegetation
- Surrounding land use

Information may also be collected on potential causes of unsuitable habitat, particularly with a view to taking action against further degradation. Characteristics are collected such as:

- Bankside fencing and grazing
- Bankside erosion and collapse
- Pollution sources
- Bankside and channel modifications

3.1.2 Method

A detailed survey plan is drawn up before commencing a habitat survey and the information to be collected identified.

When out in the field, the river is divided up into stretches using intersections marked on an Ordnance Survey map (1:50000 or 1:25000). SFCC methodology recommends the use of short survey stretches which should be:

- No more than 100 m long for rivers of 0 m to 4 m wide
- No more than 250 m long for rivers of >4 m to 1 m wide
- No more than 500 m long for rivers of >10 m wide

3.1.3 General definitions

3.1.3.1 Water depths

The survey stretch wetted area is recorded as percentage depths in four categories

- 0-20 cm
- 21-40 cm
- 41-80 cm
- > 80 cm

3.1.3.2 Substrates

In each survey stretch the percentages of each substrate type is recorded. Substrate is always recorded from the point of view of fish cover.

- High organic - Very fine organic matter
- Silt - Fine, sticky, mostly inorganic material
- Sand - Fine, inorganic particles, <=2 mm diameter
- Gravel - Inorganic particles 2-16 mm diameter
- Pebble - Inorganic particles 16-64 mm diameter
- Cobble - Inorganic particles 64-256 mm diameter
- Boulder - Inorganic particles > 256 mm diameter
- Bedrock - Continuous rock surface
- Obscured - Something obscuring substrates that cannot physically be moved

3.1.3.3 Flows

Flow percentages of the survey stretch wetted are recorded.

Table 2: Flow types

Flow type	Description
Still marginal	< 10 cm deep, still or eddying
Deep pool	>=30 cm deep, water slow flowing, smooth surface appearance
Shallow pool	< 30 cm deep, water slow flowing, smooth surface appearance
Deep glide	>=30 cm deep, water flow moderate/fast smooth surface appearance
Shallow glide	< 30 cm deep, water flow moderate/fast, smooth surface appearance
Run	Water flow fast, unbroken standing waves at surface, water flow silent
Riffle	Water flow fast, broken standing waves at surface, water flow audible
Torrent	White water, chaotic and turbulent flow, noisy and difficult to distinguish substrates

3.2 SFCC Electrofishing Survey

3.2.1 Data Recording

The GFT is a partner in the Scottish Fisheries Co-ordination Centre (SFCC), an initiative involving the Scottish Fishery Trusts and others, including the Scottish Executive Freshwater Fisheries Laboratory, the Tweed Foundation, the Spey Research Trust, the Tay Foundation and the River Conon District Salmon Fishery Board.
This group has, in partnership, developed a set of agreed methodologies and record sheets for use with electrofishing surveys and an associated database in which to record information gathered from such surveys. The electrofishing and habitat surveys undertaken by the GFT have been completed to the standards, which are required by the partners of the SFCC and recorded using the formats agreed by this group.
It is the policy of the GFT to disinfect all relevant equipment both prior to and following work in each catchment, to ensure that there is no transfer of disease organisms.

3.2.2 Techniques

To assess the fish populations present within a section of river, fish within the site were stunned and removed from the water using electrofishing equipment. They were then lightly anaesthetised using a specific fish anaesthetic (Benzocaine solution – Ethyl 4 – Aminobenzoate) dissolved in Metholated Spirits, identified, measured and once removed, returned unharmed to the area from which they were captured. The electrofishing team works across a section of river and upstream, thereby fishing the entire river in the surveyed area. A team of three trained personnel undertook electrofishing at all survey sites. The sites were electrofished once, thereby enabling minimum estimates of fish numbers to be calculated.

3.2.3 Equipment Used

The equipment used consisted of a 2.2 kw petrol generator (5 horse power) with a variable voltage output (200-250 volts) linked to an Electracatch controller unit (WFC7 – 1a). A smooth direct current was used at all sites. The control init is linked to a stationary cathode of braided copper (placed instream) and a mobile, single anode, consisting of a pole-mounted stainless steel ring and trigger switch.

3.2.4 Site Measurement

Site dimensions were recorded at each site. A site length was noted, with wet and dry widths recorded at five points in the surveyed section. An average wet and dry width was then calculated, with the wet width utilised on the calculation of fish population densities at each site.

3.2.5 Instream/Bankside Cover

Water flow characteristics, depths and the type and quality of instream and bankside cover that was available to fish, was assessed at each site and recorded in a format agreed by the SFCC. The riparian zone was also characterised by recording the

predominant vegetation structure on bank face and bank top. ‘Bare’ refers to predominantly bare ground; ‘uniform’ refers to predominantly one vegetation type but lacking scrub or trees; ‘simple’ refers to two/three vegetation types (with or without scrub or trees) and ‘complex’ refers to four or more types which must include scrub or trees.

4 Habitat Survey

4.1 Overview

The Innermessan Burn catchment rises in the hills of Balker Moor and Cairnscarrow as the Sheuchan Burn, before flowing through Tongue Glen and discharging into the Black Loch (*Figure 4.1*). The Innermessan Burn drains the Black Loch and flows approximately 2 km north west to the confluence with the Kirclachie Burn at Craigcaffie Bridge. The burn then flows a short distance before discharging into the sea at Loch Ryan at Innermessan.

Figure 4.1: Map of Innermessan Burn catchment

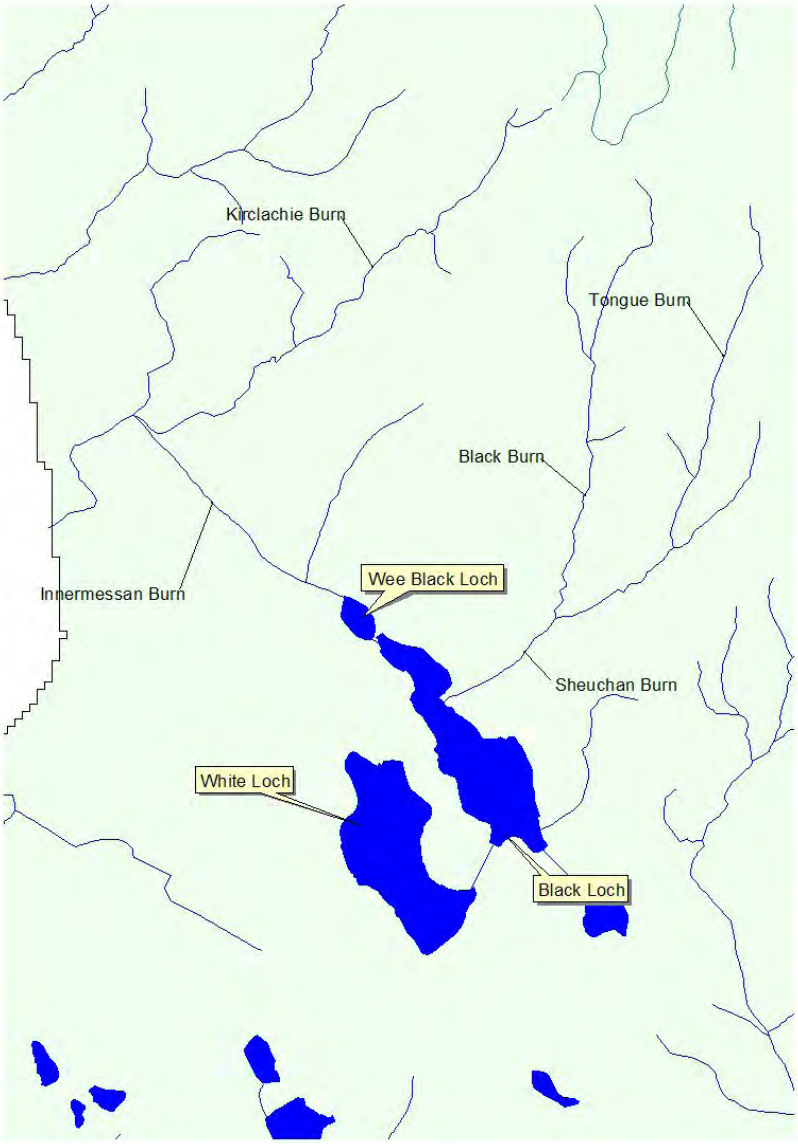

There is a range of land uses present in the catchment. The upper reaches tends to be dominated by rough pasture, coniferous woodland and broadleaf woodland. The middle and lower reaches support extensive areas of broadleaf woodland, tall herbs, scrub, improved grassland and wetland.

Approximately 5 km of the main stem and Kirclachie Burn was surveyed from the sea at Innermessan to the gorge at Tongue Glen.

The survey was split up into nine sections detailed in *Table 3*. The Innermessan Burn sections were coded IB, Black Loch IBBL, Kirclachie Burn IBKB and Sheuchan Burn IBSB

Table 3: Innermessan Burn habitat survey sections

Section ID	Location	Grid reference	Length (m)
IB1	Innermessan to Craigcaffie Bridge	NX 084 634 to NX 088 638	1300
IB2	Craigcaffie Bridge to Black Loch	NX 088 638 to NX 103 626	2000
IBBL1	Black Loch	NX 103 626 to NX 111 619	1000
IBKB1	Confluence with Innermessan Burn to Craigcaffie Glen	NX 088 638 to NX 096 643	700
IBSB1	Confluence with Black Loch to Tongue Glen	NX 111 619 to NX 116 626	1100

4.2 Accessibility And Obstructions To Fish Migration

Fish access is of prime importance with regards to the sustainability of salmonid populations, particularly salmon and sea trout which migrate up rivers to spawn. Only three potential obstructions to fish migration were identified during the survey and are presented in *Table 4.*

Table 4: Potential obstructions to fish migration

			Grid reference	
ID	**Obstruction**	**Accessibility**	**Easting**	**Northing**
IB1	Bridge Culvert	Yes	208500	563700
IBKB1	Bridge Culvert	Yes (S/F)	209400	563800
IBSB1	Fallen tree	Yes (S/F)	211100	561900

The A77 Road Bridge culvert was highlighted as a concern with relation to fish migration (*Figure 4.2.1*). While at the time of survey the river was high and significant flow was flowing through the culvert, the flow velocity was significant over a length of 25-30 m. Such velocity in flow may pose problems for ascending fish and therefore installing baffles within the structure should be considered.

Figure 4.2.1: A77 Bridge Culvert

As this culvert is situated in the lower reaches of the river, any potential blockage or obstruction to fish migration at this site could potentially prevent migratory fish from reaching the middle and upper reaches of the catchment.

A further bridge culvert that may prevent fish access was identified on the Kirclachie Burn (*Figure 4.2.2*).

Figure 4.2.2: Bridge culvert on the Kirclachie Burn

While it is thought that the culvert is likely to be passable under high flows, it is considered that during drought years or periods of prolonged low flows, this culvert may prove impassable and limit fish access into the headwaters of the burn. As the culvert is narrow in width, the structure is likely to be susceptible to debris build-ups and therefore the risk of blockage and obstruction to fish migration exists. GFT would therefore recommend that the bridge is monitored regularly for debris collections, while considering the option of replacing the bridge in the future. One other option may be to construct a boulder weir downstream of the culvert in order to deepen the channel of water and let fish pass more freely into the culvert. Large boulders would be placed across the width of the channel; mounted on a sill, also constructed with boulders. A few of the sills boulders would be removed to create a pool below a gap in the weir so that fish may pass firstly, through the barrage and then into the pool leading to the culvert.

On the Sheuchan Burn, a large fallen tree (*Figure 4.2.3*) was identified a short distance upstream of the confluence with Black Loch. This had accumulated debris and appeared to be causing a possible obstruction to fish migration. As this is just upstream of the confluence with the loch, it is important that this is not obstructing upward migration and should be re-visited during low flow when a better assessment of its severity can be made. Where possible, it is advisable to retain woody debris in the river.

Figure 4.2.3: Large fallen tree on the Sheuchan Burn

No further obstructions to fish migration were identified during the survey.

4.3 Instream Habitat

The instream habitat within the Innermessan Burn catchment varied greatly throughout the survey length. Between the tidal limit and the confluence with the Kirclachie Burn, much of the instream habitat is generally good. Most of the substrate is dominated by pebble, with some cobble, gravel and boulders present. A good diversity of flow types were present throughout this section, with numerous riffle, run, glide and pool sequences. On the whole, instream cover would generally be described as moderate, more suited to fry than parr. During the survey there was evidence of recent dredging that had taken place just downstream of Innermessan Bridge (*Figure 4.3.1*). Dredging of

instream substrate is now controlled by the Scottish Environment Protection Agency (SEPA) under the *Controlled Activities Regulations (2005).* Continued dredging will undoubtedly have a significant impact on the instream habitat and therefore if this process continues, it is vitally important that this is reported to the SEPA immediately.

Figure 4.3.1: Evidence of dredging just downstream of Innermessan Bridge

The Kirclachie Burn (*Figure 4.3.2*) supported good to excellent instream cover for juvenile salmonids. An abundance of boulder and cobble provided good instream cover, and created numerous riffle and run sequences.

Figure 4.3.2: Kirclachie Burn

The Innermessan Burn between the confluence of the Kirclachie Burn and the Black Loch (*Figure 4.3.3*) appears to have been heavily dredged and straightened in the past, and therefore now supports very little suitable instream habitat for fish. Much of this section is deep, with flow types consisting primarily of pool and glide.

Figure 4.3.3: Innermessan Burn near Granite Bridge

The Sheuchan Burn (*Figure 4.3.4*) supported good to excellent instream habitat for juvenile salmonids. Much of the burn was found to be of high energy and boulder strewn, with some cobble and pebble present. Flows were dominated by riffle and runs, with some glide and pool present. Instream cover was considered good.

Figure 4.3.4: Sheuchan Burn

Very little adult habitat is available in the lower Innermessan Burn; below the confluence of the Kirclachie Burn, within the Kirclachie Burn and within the Sheuchan Burn. Much of the adult holding is available in the Innermessan Burn above the Kirclachie Burn confluence and in the Black Loch (*Figure 4.3.5*). It is likely that migratory salmonids and brown trout will only enter the Kirclachie Burn and Sheuchan Burn during period of high flows at the time of spawning.

Figure 4.3.5: Black Loch

4.4 Spawning Habitat

The Innermessan Burn catchment generally supports moderate to good spawning substrate throughout much of the catchment. Spawning in the Innermessan Burn downstream of the Kirclachie Burn was considered moderate and more suited to trout rather than salmon, due to smaller substrates such as pebble and gravel being more dominant. The Kirclachie Burn supported good spawning habitat for both salmon and trout, with an abundance of cobble and pebble present. The Innermessan Burn between the Kirclachie Burn confluence and the Black Loch supports no spawning habitat, due to the nature of the burn at this point being deep and canal like. The Black Loch does not support any spawning habitat for salmonids. Spawning habitat in the Sheuchan Burn was considered moderate due to the high energy nature of the burn and the larger substrate present, leaving small pockets of gravel, more suited to trout rather than salmon.

One concern for spawning, particularly on the Innermessan Burn downstream of the Kirclachie Burn confluence, was the compaction or partial compaction of spawning substrate. This is likely to have occurred as a result of finer materials in-filling the gravel matrix of the river bed, possibly from past dredging or forestry activities in the upper catchment. Compaction of spawning substrate has the potential to reduce the spawning capacity in the lower burn due to adult fish not being able to create redds. It is advised to carry out some gravel cleaning or raking to loosen the spawning beds in the lower burn.

4.5 Riparian Habitat

Fish cover in the riparian habitat zone tends to be more suitable for trout rather than salmon. Trout prefer to utilise undercut banks, root wads and draped vegetation along the riparian zone, rather than instream cover provided by cobble and boulders.

Riparian fish cover in sections IB1-2 and IBKB1 was considered good to excellent, with undercut banks, root wads and draped vegetation and extensive marginal vegetation cover in IB2. On the Sheuchan Burn very little riparian habitat was available. This was largely due to both banks in the lower reaches being supported by stone walls, which provide no cover. Further up the burn in Tongue Glen, the river banks also support little cover, especially draped cover, which is likely to be destroyed by high energy flows. What little bankside fish cover that is available in these sections is provided by fallen trees, flood debris and root wads (*Figure 4.5.1*).

Figure 4.5.1: Fallen tree and flood debris providing riparian fish cover

The vegetation within the riparian zone was classed as simple to complex along both river banks. The vegetation type was dominated by deciduous woodland, improved grassland and tall herbs, with some scrub and coniferous plantations.

One concern with relation to riparian habitat is the presence of the non-native invasive species, Rhododendron (*Rhododendron ponticum*) that was recorded in sections of the catchment, particularly around Baulker Bridge (*Figure 4.5.2*) and the lower Sheuchan Burn.

Rhododendron is invasive and can shade out natural vegetation, which provide a source of food and cover for fish, as well as aiding bank stability. GFT recommend that action is taken to contain and if possible, eradicate this species from the catchment.

Figure 4.5.2: Extensive Rhododendron at Baulker Bridge

4.6 Over-shading

Over-shading was found to be a persistent problem throughout the Sheuchan Burn, which was dominated by broadleaf woodland on either bank. Shading ranged from 70 – 80%. While some shade is recommended (ideally 50% as recommended in the *Forests and Water Guidelines 4th Edition*), too much shade can lead to shading-out of other vegetation types and reduces the primary production within the burn. Tall herbs and scrub provide a source for terrestrial invertebrates in which fish rely on for food, as well as a source of important draped fish cover.

Sections of the Sheuchan Burn, certainly the lower reaches, would greatly benefit from some coppicing of branches and thinning out of the woodland to improve light levels reaching the burn and banks.

4.7 Overgrazing and trampling

Overgrazing and trampling was not considered to be a major problem within the catchment. The only sections highlighted in need of some sort of stock exclusion were the lower Innermessan Burn below the A77 Road Bridge on both banks and the Kirclachie Burn, on the left bank downstream of the bridge culvert. GFT recommend that these sections are fenced off in order to prevent livestock from accessing the burn and banks.

5 Electrofishing Results And Discussion

5.1 Figures Presented

The results of the electrofishing survey from 2008 are outlined in *Appendix 1*. Information on juvenile salmonid densities, as well as site number, tributary, location, O.S. grid reference, area fished (m^2), non-salmonid species and date of survey is included.

With regard to the fish densities tabled, these are separated into four categories which are defined below:

Salmon Fry (0+):	refers to young salmon, less than one year old resulting from spawning at the end of 2007.
Trout Fry (0+):	refers to young trout, less than one year old resulting from spawning at the end of 2007.
Salmon Parr (1+ and older):	refers to young fish of greater than one and greater than two years old (where present) from spawning years 2006 and 2005.
Trout Parr (1+ and older):	refers to young fish of greater than one and greater than two years old (where present) from spawning years 2006 and 2005.

5.2 Electrofishing Results

Site 1 – Innermessan Burn – downstream of A77 Road Bridge

This site had easy access and was selected due to its variation of flow types and substrate suitable to both salmon and trout.

An area of 84.8 m^2 was fished and healthy densities of salmonids were uncovered. Salmon fry density was high at >45 per 100 m^2, yet no salmon parr were found. However, both trout fry and parr were found at densities of >15 per 100 m^2 and 3 per 100 m^2 consecutively. A quick zap with the electrofishing equipment downstream of the site within a deeper pool revealed many trout parr including one of over 195 mm in

length. Three spined sticklebacks, a single roach and an abundance of eels were also recorded at the site.

The burn was fairly shallow on the day of surveying, with a majority of depths below 30 cm being recorded. A good mix of juvenile habitat including gravel, pebble and cobble and some boulders provided good instream cover. The flow was predominately run, with riffle and shallow glide.

Bankside cover was also good, with over 50% of both banks providing a mixture of undercuts and draped vegetation as well as 50% coverage from marginally rooted plants on the right bank. Canopy cover was recorded at 50%, provided by trees on either bank. Banksides have been grazed by livestock, but cover from gorse bushes and other dense shrubs have been protecting the banksides from excessive livestock damage.

Site 2 – Innermessan Burn – Downstream of bridge at North Lodge

An area of 63 m^2 was fished downstream of the bridge at North Lodge. Similar to findings in site 1; both salmon and trout were present at this site. Salmon fry numbers were good (>31 per 100 m^2), while salmon parr numbers were moderate (>6 per 100 m^2). Fairly good numbers of trout fry (>20 per 100 m^2) and low trout parr numbers (>3 per 100 m^2) were recorded at the site. Six Eels were also recorded up to lengths of 320 mm.

A good range of water depths were found throughout the site, with depths of 20-40 cm making up the majority. Flow types consisted entirely of run (80%) and riffle. All of the best juvenile habitat substrates were recorded; with cobble and boulder found mostly as well as 30% gravel and pebble composition.

The great variety of substrate present made this site excellent in terms of instream cover. However, bankside cover for fish was limited due to barren high walls making up either bank. As such, only 10% fish cover existed along the right bank which also provided most overhang (50%) from deciduous trees above the wall. In total, canopy cover at this site was 25%.

Site 3 – Innermessan Burn – Middle section at lower footbridge

This site was selected to examine fish presence/absence and confirm the need for habitat improvements identified in the habitat survey. 38.4 m^2 canal like habitat was surveyed.

As expected by the lack of habitat and flow types, salmon were absent from this site. However, trout fry were found in low density (>5 per 100 m^2) and trout parr, in good numbers (>15 per 100 m^2). Four roach were also taken from the site of up to 125 mm in length.

Water depths were fairly deep at 40-50 cm throughout the site. Finer substrates including fine organic matter and silt dominated over half of the site; with the remainder predominately gravel with a few boulders. Gravel felt underfoot, although stable; is likely to become at least partly compacted due to a lack of flow (100% deep glide throughout site) allowing silt to settle and compact any good spawning habitat. Instream cover was poor although some good instream vegetation existed (20%).

Bankside fish cover spanned 100% on both banks, comprising mostly of draped vegetation as well as some nice undercuts (left bank mainly). Bankfaces were covered with a degree of grass types and on the left bank, a hedgerow which spanned the entire length of the straightened channel, gave a complex bank top. Beech, elderflower bushes and fuscia were among the wide variety of banktop plants flourishing within and around the site, backing onto arable land on the right bank. Canopy cover was fairly low at 10%.

Site 4 – Innermessan Burn – Downstream of Balcar Bridge

A site of area of 87.6 m^2 was fished downstream of Balcar Bridge where flow and substrate types suggested the best composition of fish species.

There were no juvenile salmon found and trout only few; at >1 trout fry per 100 m^2 and >9 trout parr per 100 m^2. No other fish species were recorded at this site.

A wide range of water depths existed, although predominately, depths of between 30 cm and >50 cm figured most. Water flow was a mixture of shallow and deep glide and substrate types varied, with 80% gravel/pebble and 20% cobble/boulder composition. Although there is evidence that this site is likely to have been dredged out in the past; at present, the substrate appears to be stable and uncompacted. However, instream fish cover remains poor.

Fairly steep banks and 100% overhanging boughs on both banks make this site bare of bankside fish cover. Also, overshading from deciduous trees mean canopy cover is high at 80%.

Site 5 – Innermessan Burn – Outflow of Little Black Loch

This final site was selected at the highest reaches of the Innermessan Burn on the tip of the Little Black Loch.

As in the previous two sites, there were no juvenile salmon uncovered in this site. Trout however, were found in low density (>7 per 100 m^2) and only within the parr age class. Four roach and some fairly large eels (up to 300 mm in length) were also found in this site.

Generally, we would expect this site to support good numbers of juvenile salmonids; judging by the range of water depths (up to 40 cm deep), substrate types (90% gravel/pebble/cobble/boulder composition) and flows (80% run/riffle/shallow glide). However, a distinct lack of bankside cover (100% bare on both banks) and 100% canopy cover mean that this site is much too over-shaded to fulfil its potential. Pond reeds starting to encroach on the site could easily be removed and this should enable trout movement out of the loch for spawning in the upper burn.

General land use is similar to the previous site with broadleaved trees and tall herbs surrounding the burn. Overall, there is little artificial pressure (such as intensive agricultural practice) on the burn here and efforts to reduce over shading and weed build-up from the loch could be attempted without adverse effect.

6 Examining The Health Of Lochs Adjacent To The Innermessan Burn

In this section, a number of factors contributing to the health of the three lochs connected directly and indirectly to the Innermessan Burn will be examined including biological (fish), ecological (algal) and chemical (water sample) data.

6.1 Fish Data

The Black Loch and White Loch support wild indigenous brown trout as well as perch, roach and pike which are all regularly caught. Trout catches on these lochs and the Innermessan Burn over the last three seasons (2006 – 2008) can be seen in *Table 6.1*.

Table 6.1: Trout catch data from the Black Loch, White Loch and Innermessan Burn (2006 – 2008)

	2008 (av. weight)	2007 (av. weight)	2006 (av. weight)	2006 Catch and release
Black Loch	12 (1lb 11oz)	6 (1lb 9oz)	23 (1lb 15oz)	45
White Loch	166 (1lb 6oz)	122 (2lb 2oz)	88 (1lb 71/2oz)	257
Innermessan Burn	9 (14oz)	0	0	10

Catches on the Innermessan Burn have been sparse in recent years and similar numbers of fish (sea trout) have been caught during the 2008 and 2006 seasons (around 10 fish). Comparison in loch data shows that many more fish are taken in the White Loch than the Black Loch (166 v 12 in 2009) but generally, fish caught average out to similar weights on both lochs. Clearly, there is some concern on the Innermessan Burn and Black Loch, where catches are lowest.

6.1.1 Black Loch

The Black Loch and adjoining Little Black Loch are dark in colour and thought acidic in nature; receiving water over steep banks draining the surrounding coniferous forests. Water lilies are abundant within the top end of Little Black Loch and shoals of fry can be seen readily passing in the shallows adjoining the two Black lochs at this end.

The first pike was caught in the Little Black Loch in 2004, weighing 5lb 6oz. In 2006, a 23lb pike was reported from the Black Loch and recent catches have included an 18lb Pike, caught in June of this year (2009).

Figure 6.1.1.1: 2004 5lb 6oz Pike

Figure 6.1.1.2: 2006 23lb Pike

With increasing numbers of pike being caught on the Black Loch, it has resulted in the water being considered a pike fishery since 2008. This is the case on both lochs, with <u>all</u> pike currently being released unharmed to the water from which they came.

Whilst there are some lovely catches, these are few (only 12 fish in 2008) and primarily, most fishing takes place on the neighbouring White Loch.

6.1.2 White Loch

The White Loch has seen some impressive brown trout caught over the years (*Figure 6.1.2*). In 2004, a 9lb 2oz brownie was caught on the fly; in 2006, an 11.5lb brownie appeared in the catches; in 2007, a trout of 8lb 6oz was recorded; in 2008, a 9lb 5oz trout (*Figure 6.1.2)* and in 2009, a 5lb 6oz brown trout was caught. On some occasions, it has been queried if a few of these catches are in fact sea trout. This is only identifiable via a good scale sample, when growth markings would clearly indicate feeding at sea and not in freshwater.

Figure 6.1.2: White Loch Brown Trout including one of 9lb 5oz on the right (2008)

6.1.3 Fish scale samples

Stranraer and District Angling Association were asked to provide scale samples from trout caught on the White and Black Loch. In total, 22 scale samples were provided and these were sent to Bryce Whyte at the Marine Scotland laboratory for reading. Age and spawning marks (if applicable) are shown in *Table 6.1.3* below.

Table 6.1.3: Age classes of brown trout caught from the White Loch in relation to size

Date	Loch Name	Sex (M or F)	Weight (lbs/oz)	Age (Years)
10/05/2008	White Loch	F	$13^{1/2}$oz	-
10/05/2008	White Loch	M	1lb $1^{1/2}$oz	-
09/05/2009	White Loch	F	3lb $8^{1/2}$oz	-
18/03/2008	White Loch	F	4lb	-
17/07/2008	White Loch	M	9lb 5oz	-
10/05/2008	White Loch	F	1lb	3
10/05/2008	White Loch	F	1lb $7^{1/2}$oz	3
20/05/2008	White Loch	M	1lb 2oz	3
25/05/2008	White Loch	-	1lb 2oz	3
02/06/2008	White Loch	F	1lb 5oz	3
03/04/2008	White Loch	F	1lb 10oz	3
29/04/2008	White Loch	M	1lb 10oz	3
09/05/2009	White Loch	F	10.5oz	3
10/05/2008	White Loch	F	13.5oz	4
09/05/2009	White Loch	F	1lb 10oz	4
09/05/2009	White Loch	M	2lb $6^{1/2}$oz	4
10/05/2008	White Loch	M	2lb $5^{1/2}$oz	4
03/06/2008	White Loch	M	1lb 8oz	4 SM 4
09/04/2009	White Loch	F	1lb 11oz	5 SM 3,4,5
25/05/2008	White Loch	-	1lb 14oz	5 SM 4,5
10/05/2008	White Loch	F	1lb $12^{1/2}$oz	5 SM 4,5
10/05/2008	White Loch	F	1lb 7oz	5 SM 4,5
01/05/2008	White Loch	F	2lb	6

Scale samples were provided from White Loch fish only and from the 23 scales read; only 18 were possible to age. Eight trout were aged 3 years; five at 4 years; four at 5 years and one at 6 years. Spawning marks were identified on five trout aged 4 and 5 years; only one of which began spawning at 3 years old and the rest starting when 4 years old. Anglers who provided the scales identified the fish as 14 females and 7 males.

The trout aged as three year olds varied in weight from $10^{1/2}$ oz to 1lb 10oz. Those at 4 years weighed between $13^{1/2}$oz and 2lb $6^{1/2}$oz. Trout aged five years weighed between 1lb 7oz and 1lb 14oz. One six year old trout was identified and weighed 2lbs. Unfortunately, scales provided from larger trout (3lb $8^{1/2}$oz and 9lb 5oz) were unable to be read because of a lack of good scales.

The one trout thought to be a sea trout weighed 1lb 14oz and was aged at 5 years, having completed two spawnings at 4 and 5 years. This trout is most likely a brown trout as there appears to be no significantly greater growth than the other similar aged trout.

6.2 Water Chemistry

Water samples were taken on the 6th July 2009 from single points along the bank of the three separate lochs. These were sent to SEPA for analyses, the results of which are shown below (*Table 6.2*) and classification done where possible, using the River Classification Scheme for Scotland (SEPA tool).

Table 6.2.: Water sample analysis results for the Little Black Loch, Black Loch and White Loch

	Total Oxidised Nitrogen (mg/L)	Ammon-iacal Nitrogen (mg/L)	Ortho-phosphate (mg/L)	Chloride (mg/L)	pH	BOD (mg/L)	Suspended Solids (mg/L)	COD (mg/L)
Little Black Loch	0.168	<0.04	0.0200	21.0	7.1 (**A2**)	-	3.9	26.0
Black Loch	0.229	<0.04	0.0160	20.9	7.2 (**A2**)	1.2 (**A1**)	3.8	26.0
White Loch	<0.1	<0.04	0.0540	26.3	8.7 (**A1**)	4.1 (**A2**)	6.8	23.0

Key: **A1** = Excellent **A2** = Good

These initial samples will provide baseline data against any further sampling deemed necessary in future. The results imply the two main fishing lochs (Black and White Loch) are presently of good to excellent water quality at the locations sampled, although the White Loch has a higher Biological Oxygen Demand (BOD) and Suspended Solid content, probably for the reasons discussed in sections 6.3 and 6.4 below.

Historical data (from 2006 onwards) was supplied by SEPA from six sample points in the Black and White Loch and adjacent Sheuchan and Innermessan Burn. There was a possibility that acidification may be a problem in the Black Loch and consequently, the burns adjacent to, including the upper Innermessan Burn and the inflow of the Sheuchan Burn have been given most consideration. As such, three SEPA sites were selected for analysis.

The Sheuchan Burn was sampled between April 2006 and February 2007 and in general, BOD ATU was excellent, Iron content good to excellent and pH at its lowest 5.96 and highest at 7.43 which is good to excellent in terms of fish tolerance for the water.

The Innermessan Burn was sampled between February 2008 and July 2009, upstream of the A77 Road Bridge. Water quality measured through Dissolved Oxygen and BOD ATU was mostly excellent. PH readings were lowest at 6.52 and highest at 7.49 which are ideal for supporting salmonid spawning, as identified during the early electrofishing sites.

The final review was done on sample data taken from the Black Loch, at its outflow to the Little Black Loch. Data was collected between March 2006 and March 2007 and in general, water quality was good to excellent and pH values were lowest at 6.79 and highest at 7.52 which suggest the water is not acidified.

6.3 Algal Analysis

Historically, the White Loch has been known to contain high counts of cyanobacteria or blue/green algae. To uncover the current status of the loch, algal samples were taken from the White Loch and Black Loch at the same time and location as samples collected for chemical analyses.

On the Black Loch; cyanobacteria present included Oscillatoria, Anabaena, Microcystis and Coelosphaerium. These were found at low levels, less than 20,000 cells/ml. On the White Loch, cyanobacteria present included Oscillatoria, Anabaena and Microcystis at levels >20,000 cyanobacteria cells/ml but less than 100,000 cells/ml. Overall, both lochs had algae present; the White Loch with fairly high counts, but not yet at the level of an algal bloom.

The White Loch has previously been studied by SEPA in "*An assessment of the trophic status of White Loch, Lochinch, Castle Kennedy (Galloway) 2006*". Chemical and biological samples were taken at monthly intervals between March 2006 and March 2007 and findings showed relatively minor nutrient input into the loch from the spring inflow and from the Sheuchan Burn into the Black Loch. In-loch nutrient and Chloride concentrations also highlighted the White Loch as eutrophic (it has naturally high nutrient levels which makes it very productive giving rise to dense populations of algae in mid-summer). Diffuse pollution may be a source of nutrient input into the White Loch; this could be investigated in future work.

Algal blooms clearly have a negative effect on fish populations. The current level of blue-green algae in the loch should be monitored closely as an increase in cell counts towards 100,000 cells/ml could have serious health implications for both fish and humans coming into contact with the water (anglers particularly).

6.4 Plant Analysis

Canadian Pondweed or Waterweed (*Elodea canadensis*) has been highlighted as a problem in the White Loch and a sample has been identified by Dr Barry Millar. This non-native invasive plant, once it becomes extensive, can be a nuisance to anglers fishing the loch. There are a number of methods that can be adopted for its control.

Previously, chemical control was undertaken using the herbicide Dichlobenil (applied as Caseron G) but following the products removal from the UK market in March of this year (2009); its usage is only permitted until March 2010. However, successful removal of *Lagarosiphon major* (the African curly-leaved waterweed) which belongs to the same family as *Elodea* has been undertaken on Lough Corrib in Ireland where extensive research has taken place since the weeds discovery in 2005. Results from studies undertaken in 2008 and early 2009 have provided some recommendations towards controlling the weed depending on the time of year the control is to be applied.

Mechanical cutting or deep cutting using trailing knives or V-blades (attached on 8 m-length chains) is best applied when the stems/strands are buoyant and branched and will float to the surface when cut, allowing for quick collection and disposal. In the case of *Lagarosiphon* this method is best applied during the winter months (October to April) when the stems are erect. Further investigation will show if the growth pattern in *Elodea* also permits best results from winter cutting. For small strands of *Elodea*; hand removal can be carried out by divers who can selectively remove each plant by the root and transfer to a boat for disposal.

Alternatively, a light-exclusion method of control can be adopted using a biodegradable jute geotextile; trialled and tested in the studies carried out on Lough Corrib in Ireland. Although still in the early stages of its development, the jute or hessian mat of variable size (up to 5 m x 100 m) is fed from a boat and laid by divers who secure it to the sediment using weights. The beauty of this method is that once laid, the mats rarely move and do not interfere with boat traffic or recreational use. Trials continuing this year will hopefully determine the length of time mats should be left in place to effectively kill the weed. If *Elodea* is to behave in the same manner as *Lagarosiphon* then we would expect the plant to collapse during the summer months and application of the jute mats (particularly sealing down the sides) to be easiest during this time.

Whichever method is adopted, distribution of the weed should be assessed before and after application by snorkelling, grapnel sampling (8-pronged grapnel attached to a length of rope), diving or viewing through a glass-bottomed tube; all from a boat. Effected areas should be accurately recorded in a global positioning system (GPS). If an effective herbicide becomes available again (this is unlikely), this could be used in conjunction with either of the above methods and in granular form which will sink and be absorbed by the lake sediment and consequently, by the *Elodea* via root uptake.

If resources are limited, effort should be concentrated in areas where the potential to create fragments is greater. Transfer is also common in places where wildfowl persist and this may be an important consideration for the White Loch where geese are regularly seen.

Finally, there is evidence that a rare Six Stamened Waterwort known as *Elatine Hexandra* exists in the White Loch and care should be taken to avoid its destruction if and when control on the Canadian Pondweed is undertaken.

6.5 Pike

As mentioned in section 7.1, both lochs support a pike population and these will be thriving due to the 100% catch and release policy in place at present. In the short term, this is good news for the increase in revenue taken from pike anglers visiting the lochs. However, in the long term, the effects of numerous pike could have implications for the current healthy trout population and these effects should be considered.

Pike feed on an abundance of prey species as well as themselves. They have been found to specialise on hunting prey fish approximately a third of their length and this usually means that pike of ages 1-4 years prey on juvenile fish and smolts (in a riverine system) whilst the adults predate on larger fish including their own (self control).

It may be worthwhile undertaking stomach content analysis on pike of various sizes. If all age classes of brown trout are present, it will be a good time to review the significance of both fisheries and which is most important to preserve. If the outcome results in some sort of pike control taking place, it may be sensible to control on the White Loch where the healthiest brown trout fishery exists at present. Control methods including seine and gill netting are most effective in the summer whilst angling is best in the autumn.

7. Discussion

7.1 Habitat

Three potential obstructions to fish migration were recorded during the survey. The first at the A77 culvert which is wide and shallow and requires baffles to be put in place to deepen and narrow the passage for ease of fish movement in low flows. The second obstruction observed resulted from a raised culvert tunnel at the Kirclachie burn which is virtually impassable in low flows. In the meantime, monitoring for debris build-up should be done regularly because of the culverts narrow passage being likely to trap debris; this itself inhibiting fish passage. The final obstruction was a fallen tree on the Sheuchan Burn, shortly upstream of the confluence with the Black Burn. This should be removed first as a quick and cost-effective method for easing fish access into the burn from the Black Loch.

Instream habitat in the Innermessan catchment is probably moderate. The lower section below the A77 bridge has some really good juvenile habitat, best suited to fry aged salmonids. This section could benefit from selective boulder placement to break the habitat up and provide for parr cover. However, there is already a good few hundred metre stretch upstream of the A77 Bridge to North Lodge which already holds good parr habitat. The Kirclachie Burn which enters at this point has some very good instream cover. The main Innermessan channel however, has suffered badly from previous dredging and the entire middle section between the confluence with Kirkclauchie burn and the Black Loch is deep and canal like with very little instream cover for fish. The Sheuchan Burn which enters the Black Loch was surveyed and had good to excellent instream cover although a lack of spawning sized material is probably accountable to the burns high energy.

For trout, bankside cover is suitable throughout almost the entire section below the Black Loch, provided by undercuts, draped vegetation and root wads. Whilst shading by higher plants is good for providing fish cover; the Sheuchan Burn, especially at its lower reaches, is over shaded and would benefit from selective tree coppicing to improve productivity in this section.

Overgrazing and trampling was not considered a great problem in the Innermessan catchment. Only two sections were highlighted to benefit from stock exclusions and these were downstream of the A77 bridge and on the left bank of the Kirclachie Burn where dairy cattle were present on the day of surveying.

7.2 Electrofishing

7.2.1 Site 1 Innermessan Burn – Downstream of A77 Road Bridge

As indicated through the habitat survey, substrate cover within this section of the burn is more suited to fry than parr and therefore no salmon parr were uncovered but a good density of fry existed. Both trout fry and parr were found here, in lower densities to salmon fry but still in good numbers; benefiting from the undercut banking and overhanging vegetation which lies consistently throughout the lower section of the Innermessan. This was a productive site; holding a number of other fish species including the European Eel *Anguilla anguilla* which is now listed as a CITES appendix II

species as well as being a UK Biodiversity Action Plan (UKBAP) species and a priority species under the Dumfries and Galloway Local Biodiversity Action Plan (LBAP).

7.2.2 Site 2 Innermessan Burn – Downstream of bridge at North Lodge

A good range of substrate types and depths were found in site 2 and both age classes of trout and salmon appeared in the catches with salmon slightly dominating over trout in numbers. Whilst instream cover is good in this site; bankside vegetation is sparse because of the high wall bankings to either side. However, canopy cover is good and substrates being stable and uncompacted are likely to support spawning salmon and trout on an annual basis.

This is probably the final spawning site for salmon on the Innermessan Burn before it turns to the deep canal like channel right through to the Little Black Loch. This habitat will support trout much better and these are most likely living throughout this upper section. It may well be that many fish (both salmon and trout) branch off and ascend the Kirclachie burn which enters above the North Lodge. Substrates suited to supporting both salmon and trout spawning are found in this burn. The GFT would advice that an electrofishing survey is undertaken in the Kirclachie burn at the same time as future surveying to investigate juvenile salmon and trout presence/absence here.

7.2.3 Site 3 Innermessan Burn – Middle section at lower footbridge

As expected, no salmon were found within this site because of a lack of suitable spawning material, flows and instream cover. However trout were uncovered in low numbers of fry (>5 per 100 m^2) but good numbers of parr (>15 per 100 m^2) and this was consistent with what we would expect judging by the depth of water and lack of spawning material throughout the whole middle section. Because of the lack of substrate material already present, this site is unlikely to benefit from gravel placement and should be left primarily as parr holding water with the addition of some boulders to give better instream cover so that salmon may utilise the area as well as trout.

7.2.4 Site 4 Innermessan Burn – Downstream of Balcar Bridge

By the lack of good instream habitat, only trout were expected at this site and these were found in low density (>1 fry per 100 m^2 and >9 parr per 100 m^2). However, the instream cover and range of water depths made this site habitable to other fish species although there is some evidence upstream of the site that the burn has been dredged previously judging by the lack of substrates. Overshading was also noted as a problem in this site and selective tree coppicing/brashing would greatly improve the sites potential for holding more fish.

7.2.5 Site 5 Innermessan Burn – outflow of Little Black Loch

A range of substrate size and flow types made this site ideally suited to supporting both salmon and trout but similar to the previous two sites, only trout were found as parr and in fairly low density (>7 per 100 m^2). Eels and a few roach were also uncovered in this site. Overshading is the main pressure on this area and reeds encroaching on the site from the loch would not be hard to remove to ease access for fish (trout) to ascend into the loch.

7.3 Biological, ecological and chemical data

Catch data provided by the Stranraer and District Angling Association shows that over the last three years, 2006 has been the best season in terms of catches on the Black Loch, White Loch and the Innermessan Burn. In terms of average weight of fish; the White Loch has the best record with fish caught during 2007, weighing on average 2lb 2oz. On the Innermessan Burn; the last three years catches have been nominal with only 2006 and 2008 recording any sea trout. Overall, 2006 was the best for catches on each part of the catchment. Keeping a good record of catch data over the following years will give a broad understanding of the health of each fishery. This should be continued as a means of comparison in annual trends. Recording down to species type on the lochs would also be useful, particularly concerning pike domination in the loch systems.

Scale sample results showed that most fish caught are between 3 and 5 year old and these weigh from $10^{1/2}$ oz up to 2lb $6^{1/2}$oz. From the scales provided, a ratio of 2 females to 1 male exists and this raises no concern over spawning potential in the White Loch brown trout population.

The scale samples and related data are key to understanding the population dynamics within the loch systems and as this is the easiest method by which to gather data on a regular basis; anglers should be encouraged to provide as much information as possible along with their scale sample. It is not always easy to get a really good scale sample so anglers should be encouraged to take a number of scales using the technique illustrated in *Appendix 2.*

The results from chemical analysis on water samples taken throughout the catchment are encouraging and suggest there is no concern for acidification in the Black Loch at present. When assessing water quality and its influence on fish health; pH is often one of the first determinants we look at. Eggs and alevins of trout and salmon are vulnerable to low pH and water at pH 3.5 is lethal to trout and salmon eggs. However, pH values up to 4.5 can still kill salmonid eggs when the water is already under pressure from high aluminium concentrations or other such-like heavy metals. It is well documented that the action of the hatching enzyme (chorionase) of salmon is blocked at pH 4.5 and below. Overall, salmonids survive best in water of pH 5 up to pH 9. PH values off either end of this scale are harmful and lethal below pH 4 and above pH 9.5. Results from the Little Black Loch and Black Loch give pH values around pH 7 whilst the White Loch gives a pH of 8.7. Both sets of data are within the optimum pH tolerated by salmonids and therefore give no reason for concern.

Historical data provided by SEPA is also encouraging with the lowest pH being reached on the Sheuchan Burn (pH 5.96) and the highest reading of pH 7.5 being reached across all three sample points. Coniferous forestry is likely to influence water quality in the Sheuchan Burn and for this reason; it is the place most likely to provide acidified water run-off into the Black Burn. It would be interesting to find out what fish are present in the Sheuchan Burn as this will give a good insight into the severity of lower pH influences on the burns fish population (should one exist).

Algal data from the two lochs is not alarming but should be kept an eye on in the White Loch for indications of an algal bloom arising during the summer months. However, because of the eutrophic nature of the loch, influxes of algae are likely to occur on an

annual basis and it is probably worth having samples analysed during the summer to keep an eye out for algal blooms as a matter of public health risk as well as fish health.

All methods for controlling Canadian Pondweed on the White Loch should be investigated further to reach a solution for controlling its spread. Eradicating is probably not an option because of the high potential of wild-fowl (resident on the loch) spreading the plant throughout the loch.

Pike can be an issue to fishery owners primarily catering for game anglers. However, in the case of still waters, it is becoming more and more popular for anglers to fly fish for pike and this is an up and coming section of the sport. Trout can co-exist with pike, but because of the pikes ferocity as a top predator; there is always the worry that by predating on prey one third of their length; eventually the very biggest of pike (23lbs +) will eat the big trout and so the population dynamics will lean to producing large pike and fewer large trout. It may be worthwhile carrying out stomach content analyses on some of the pike to investigate if indeed, they are beginning to prey on larger trout within each loch. If this is the case, it may be worthwhile assessing the importance of each fishery (i.e. do you want to cater for pike anglers or trout anglers and is there room for both?).

7.4 Further data

The GFT regularly use adult fish traps as a means of monitoring fish coming into a spawning burn. Traps are set during the peak time of fish movement (spawning season) and fished for up to two months (probably October - November); gathering all fish that enter the burn during that time. This is a safe and dependable way of obtaining adult fish and as a capture method, produces the least stress on the fish compared to other methods (i.e. electrofishing, netting).

In order to investigate further the state of sea trout (in particular) ascending to spawn in the Innermessan Burn; the GFT advice that the Stranraer and District Angling Association construct a fish trap similar to that seen in *Figure 7.4.1*. Two possible locations have been identified in the lower Innermessan Burn; between the A77 Road Bridge (NX 086637) and the culvert identified as problematic to fish passage in the habitat survey (NX 087633). *Figure 7.4.2 and Figure 7.4.3* show each of the possible trap locations; each site providing a steep bank onto which the trap can be secured.

Once a site has been selected, measurements of burn width should be taken and *Appendix 3* used as a guide for constructing the trap using reinforced rods and 2 inch weld mesh. Once completed, the trap should be fitted and checking done at least daily and when safe enough to do so; particularly in greater flows when fish will be entering in greatest numbers. At least two people should check the trap; one inside gathering fish and the other outside near at hand to assist with handling fish into a tank of fresh water on the bank. When all fish have been gathered from the trap, members of the club can go though each fish; carefully measuring its length, sex and weight before taking a scale sample and releasing the fish in safety (marginal water for best recovery) upstream of the trap. Weaker fish may fall back against the trap and frontal grate. These should be cleared and replaced upstream before leaving the site.

Figure 7.4.1: GFT Adult fish trap for use in spawning burns

This adult fish trap consists of two parts: a long frontal barricade (with bars narrow enough to stop fish passing through) which secures the main box-like trap (with front entrance) to the rear of the barricade. Once constructed in low flow, the entire trap is secured with wire to permanently fixed wooden boards on both banks and rocks are placed around and beneath the trap to fill in any gaps. The trap only fishes in high water when fish ascending the burn enter through the raised entrance and become trapped, usually resting along the bottom of the cage box. When flows are low and water levels do not exceed the level of the raised entrance; the trap will not function and in fact act as a barrier. However, in high water, many fish are running the burn and during this time, most movement of spawning fish up-river occurs and the trap should be checked regularly.

Figure 7.4.2: First possible location of fish trap – downstream of farm track, where bricks are lying on banksides

Figure 7.4.3: Second possible location of fish trap – at lower end of burn, upstream of A77 culvert

8 Recommended Actions

- Investigate producing a baffle system under the A77 Road Bridge in order to narrow and deepen the channel to ensure fish passage during low flows.

- Monitor the Kirclachie Burn bridge culvert for debris collections, with the aim of replacing the bridge or creating a barrage to improve fish access.

- Investigate further whether the large woody debris on the lower Sheuchan Burn should be retained or extracted.

- Undertake selective boulder placement within the canal like middle section of the Innermessan Burn to increase flows and instream cover.

- Prevent further dredging activities throughout the catchment.

- Carry out localised gravel cleaning or raking to improve spawning beds in the lower river where redds are most susceptible to build-up of silt.

- Aim to control, contain and if possible, eradicate Rhododendron within the upper catchment.

- Coppice branches and thin out woodland on the Sheuchan Burn and parts of the upper Innermessan Burn, with the aim to reduce overshading.

- Reduce livestock trampling around and within the burn by fencing double bank on the lower Innermessan Burn and left bank on the Kirclachie Burn, downstream of the bridge culvert.

- Continue to monitor trends in juvenile salmon and trout abundance in the Innermessan catchment by carrying out regular electrofishing surveys.

- Undertake an electrofishing survey on the Kirclachie Burn and Sheuchan Burn to determine salmon and trout presence/absence in these tributaries of the Innermessan Burn and Black Loch.

- Create an adult fish trap to catch and monitor salmon and sea trout entering the Innermessan Burn at the time of spawning.

- Consider removal of reeds at the outfall of the Little Black Burn to ease fish passage.

- Consider all methods for controlling Canadian Pondweed on the White Loch.

- Monitor for algal blooms on the White and Black Loch.

- Monitor catches and sizes of fish (particularly brown trout) caught on the White and Black Loch and continue to collect scale samples where possible.

- Consider undertaking stomach content analysis of pike taken from the lochs.

- Consider regular review of the 100% catch and release rule for pike on the lochs.

Appendix 1: Juvenile salmonid population densities (per 100 m^2 of water) recorded during an electrofishing survey of the Innermessan Burn Catchment during the summer of 2008

Site No	Watercourse	Location	Grid Ref	Date of Survey	Presence of Other Species*	Density per 100m^2 of water			
						Salmon Fry	Salmon Parr	Trout Fry	Trout Parr
1	Innermessan Burn	D/S A77 Road Bridge	208500 563700	26/9/08	E, Ro, SB	>45	>0	>15	>3
2	Innermessan Burn	D/S Bridge at North Lodge	208850 563850	26/9/08	E	>31	>6	>20	>3
3	Innermessan Burn	Middle section at lower footbridge	209300 563450	26/9/08	Ro	0	0	>5	>15
4	Innermessan Burn	D/S of Balcar Bridge at crossroads	210050 562750	26/9/08	-	0	0	>1	>9
5	Innermessan Burn	Outflow of little Black Loch	210300 562650	26/9/08	E, Ro	0	0	0	>7

*** Other Fish Species**

E = Eel
Ro = Roach
SB = Three Spined Stickleback

Appendix 2: Scale sample technique

TECHNIQUE FOR TAKING A SCALE SAMPLE

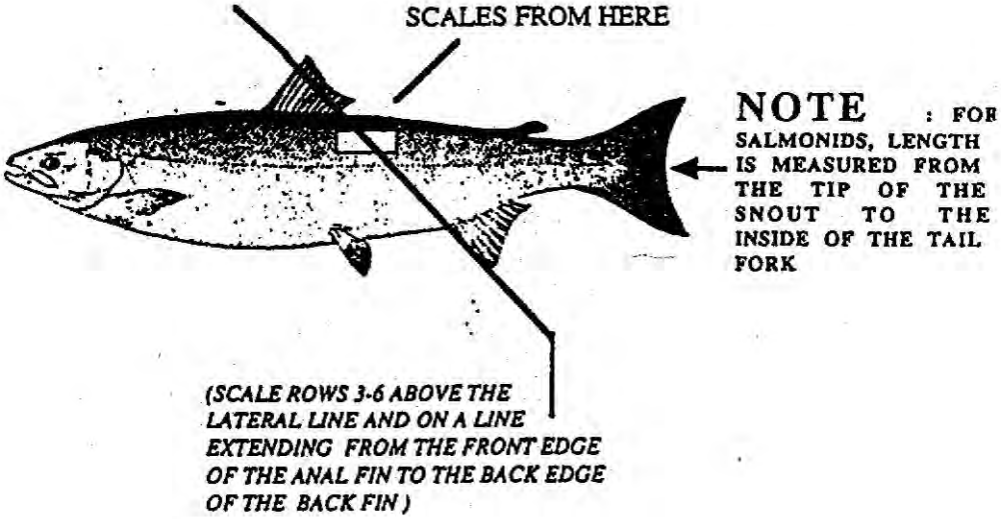

(Note : It is best to write on a scale packet before it becomes wet ! If you don't have a scale packet, a piece of folded paper into which a blade can be inserted will do. Remember to write the date, place & size of fish on the paper .)

1) **The scales are taken from the area shown in the diagram above, with a knife blade**

2) **Run the blade several times across the target area in the head to tail direction (with the lie of the scales) to remove the glaur (slime).**

3) **When the glaur has been removed, run the knife in the opposite direction (against the lie of the scales, tail to head) over the target area. This will remove a sample of scales (about 6 scales make a reasonable sample). The scales will stick to the knife blade.**

4) **Open the scale packet, put the knife blade inside, then close the packet onto the blade. Hold the blade firmly through the packet , and then pull out the blade. This will wipe the blade clean, leaving the scales in the packet.**

SCALES ARE EASILY TAKEN FROM LIVE FISH THAT ARE BEING RETURNED, WITH NO HARM DONE - IF THE FISH ARE HANDLED CAREFULLY

Appendix 3: Guide to producing an adult fish trap

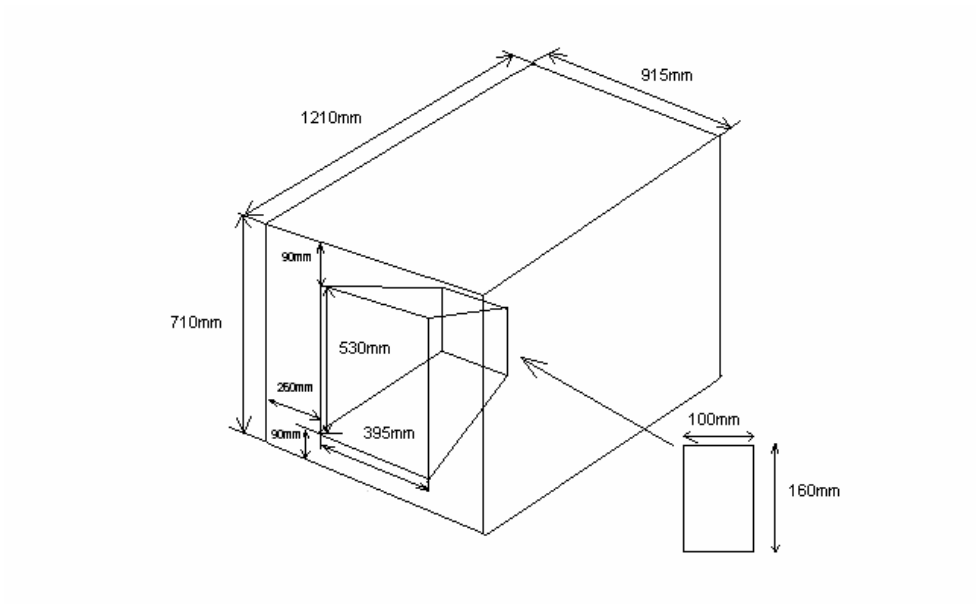

Cage and tunnel made with 2"weld mesh. Opening goes 600mm into trap. Top of trap to be made up of a double lid to allow access to trapped fish. Frame made from 1.5" light weight angle.

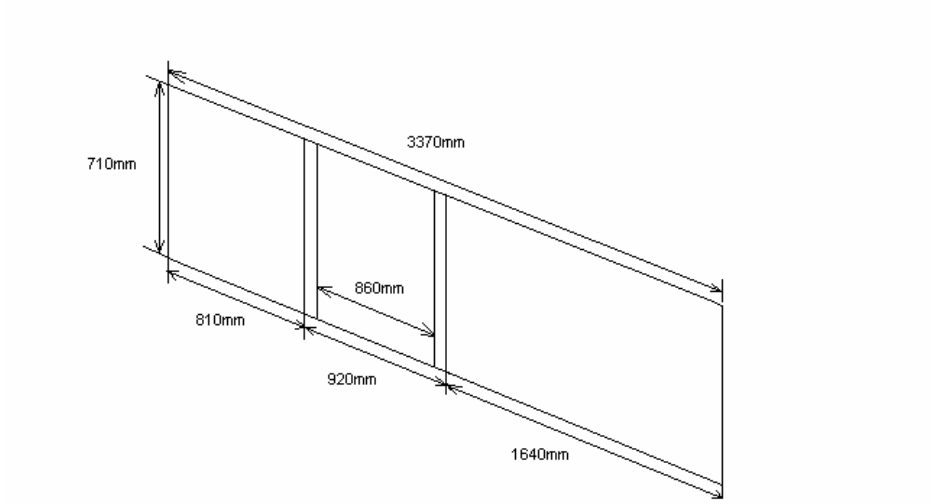

Width of barrier is only a guide and should be built to suit river construction. 920mm gap left to accommodate cage with flanges to hold it in place. Rest of barrier circumference is made of 1.5" heavy angle. Vertical rods 10mm wide with a gap of 1 3/8" to 1 ½"between rods. Smaller gap required for sea trout.
Bolts on verticals of barrier to line up with ones on trap to hold it securely.