Advisory Visit

River Aire, North Yorkshire

September 2011

1.0 Introduction

This report is the output of a site visit undertaken by Tim Jacklin and Gareth Pedley of the Wild Trout Trust to the River Aire on 26th September, 2011. Comments in this report are based on observations on the day of the site visit and discussions with Roy Draper, Malcolm Greenhalgh, Chris Heap and Brian Wells of Bowland Game Fishing Association (www.bgfa.org.uk) and Mark Hewitt, Wildlife Officer with the Yorkshire Dales National Park Authority (YDNPA).

Normal convention is applied throughout the report with respect to bank identification, i.e. the banks are designated left hand bank (LHB) or right hand bank (RHB) whilst looking downstream.

2.0 Catchment and Reach Overview

The River Aire rises near Malham in North Yorkshire in an area of carboniferous limestone geology. It then flows through Gargrave and Skipton and on into West Yorkshire, through Keighley, Shipley and Leeds, being joined by the River Calder before entering the Yorkshire Ouse. The reach visited is located in the upper catchment near Newfield Bridge near Bell Busk (Figure 1). The upstream limit of the reach inspected was at grid reference SD 90590 58532 and the downstream limit at SD 90758 57407, a river length of approximately 1.7 km.

The River Aire falls within the Humber River Basin District (under the Water Framework Directive - WFD) and this section (waterbody ID GB104027063100; River Aire from Malham Beck to Otterburn Beck) is currently classified as being in 'good ecological status'. Further information on WFD can be found at www.environment-agency.gov.uk/research/planning/33106.aspx.

This section of the Aire lies within the Yorkshire Dales Natural Area (http://www.naturalareas.naturalengland.org.uk/Science/natural/NA_search.asp). The Yorkshire Dales Natural Area profile states that "*Most Dales' rivers have been affected by drainage and heavy stock grazing in both the catchments and floodplains, resulting in high peaks and troughs of flow, excessive erosion and a scarcity of wetland features".* The River Aire is no exception to this general statement. The profile states visionary objectives

which include the restoration of natural river processes (natural catchment hydrology and less intensively managed floodplains) and enhancing the populations of ‘flagship’ species including bullhead, brown trout and native crayfish.

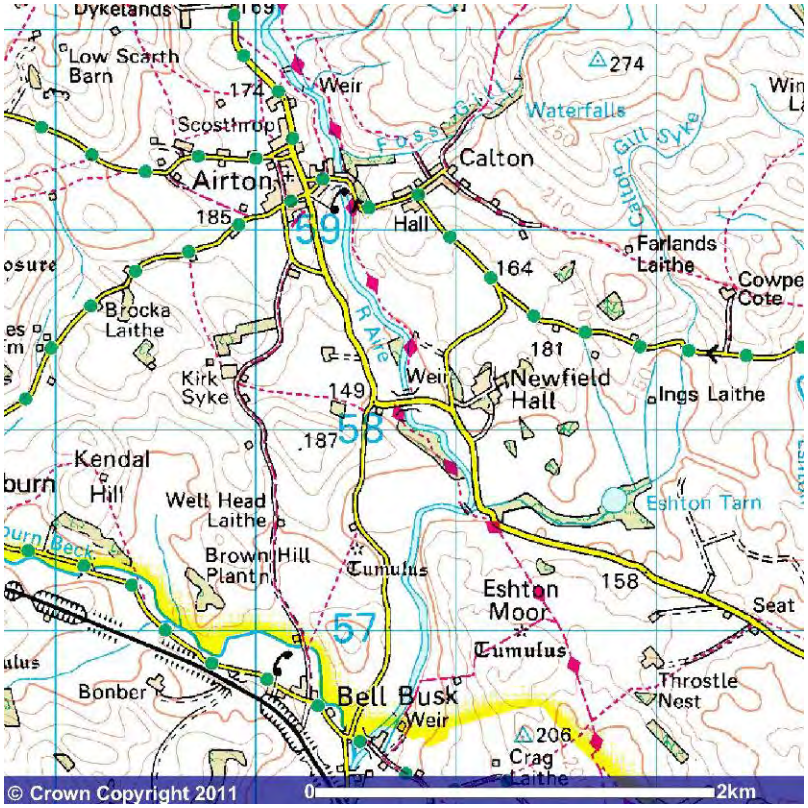

Figure 1 **Image produced from Ordnance Survey's Get-a-map service. Image reproduced with permission of Ordnance Survey and Ordnance Survey of Northern Ireland.**

3.0 Fishery Overview

The upper River Aire has been a recreational trout fishery for many years and a photograph taken just upstream of this section appears in the classic North Country angling book *Brook and River Trouting* (Edmonds & Lee, 1916). BGFA have leased the fishing here for many years and some members present had 50 years experience of fishing this reach. BGFA used to introduce takeable-sized trout but the river is currently not stocked and relies on natural production, which is reportedly good. It is regarded as a challenging water to fish, used by only a small proportion of BGFA’s 150 members, but capable of producing specimen-sized trout.

BGFA requested this advisory visit for some guidance on habitat improvement and an opinion on the causes of some changes to the shape and depth of the river in some areas.

4.0 Habitat Assessment

There are two distinct influences on the shape of the river channel on this part of the Aire, namely land use and bank reinforcement. Land use within this reach is predominantly improved grassland with intensively grazed banks. Where livestock have unfettered access to the river this results in a bank with few (if any) trees and trampled (poached) margins which are susceptible to increased rates of erosion; this leads to a shallow, over-wide channel with poor in-stream habitat for fish (Photo 1).

Some lengths of river have banks have been reinforced (probably in the C19th) with stone walls, often with trees growing above. An example of this is immediately upstream of Newfield Bridge (Photo 2). The reinforced banks are much more stable and resistant to erosion meaning that the river channel in these areas tends to be narrower and deeper and much better fish habitat. Potential disadvantages to totally stabilised banks can include a lack of undercuts and overhead cover (good adult fish habitat) and a lack of acceptable rates of erosion to provide input of coarse sediments (gravel) for fish spawning and invertebrate habitat.

BGFA expressed concern about a particular pool upstream of Newfield Bridge which has become shallower over the last few years, reducing its value as adult trout habitat (Photo 3). The stone wall revetment on the outside of the bend where this pool is located has broken down, although the actual channel width is not reported to have changed markedly. The reason for this pool becoming shallower is most likely to be an area of river a short distance upstream where some more recent bank revetment has failed and bank erosion (lateral scour) is taking place at a much increased rate (Photo 4). This erosion is increasing the rate of supply of sediment locally and the coarser particles (gravels, cobbles) are settling in the pool downstream, reducing its depth.

Photo 1 Grazed, tree-less banks resulting in accelerated bank erosion and an over-wide, shallow river channel – poor habitat for fish.

Photo 2 Stone wall revetment with mature tree growth above (left bank). This stable bank form creates a narrower, deeper channel (better fish habitat) but limits natural river processes.

Photo 3 In-filling with coarse sediment of a well-known trout holding pool here (arrow) is causing concern.

Photo 4 The likely cause source of the sediment causing the in-filling is just upstream where failure of relatively recent bank protection (stone revetment and tree planting) has resulted in excessive rates of erosion.

The relationship between land use, bank stability and the rate at which natural river processes take place is the crux of the issue. The natural processes of erosion and deposition, which create pools, riffles and gravel bars (the building blocks of healthy river habitats), are desirable *as long as they occur at a natural rate*. The current land use alongside much of the river means that erosion and deposition take place at greatly accelerated rates, damaging river habitat; stone bank reinforcement as a response to this is a compromise which has limitations in terms of cost, maintenance requirements and 'freezing' natural processes.

At present, some sections of river have failing C19th stone bank reinforcement which is going to lead to rapid bank erosion for the reasons mentioned above (Photo 5). If these areas are re-instated it will be expensive and success will be uncertain, because land use and bank instability remain the same behind the walls – failure in one area will quickly spread. For longer term improvements, the land use and vegetation structure of a zone alongside the river needs to change. Some great examples of this can be seen where BGFA have worked previously.

Downstream of Newfield Bridge, BGFA fenced out some lengths of bank and planted blocks of trees about 25 years ago. These have been very successful, resulting in a much more stable bank with good low cover over the river margins. The trees are a mix of species including ash, alder and willow and all of a similar size; they are now at a stage where some maintenance is required to produce a variety of sizes and levels of shading and cover. It is recommended that some of the willows are pollarded to encourage low bushy growth; the trimmings can be woven or pegged to the toe of the bank at the base of the trees to encourage sprouting and more valuable dense low cover. Some willows could be partially cut through at the base and hinged over alongside the bank to achieve a similar effect. Alders can be coppiced and left to sprout from the base, but only a small proportion should be done each year in order to achieve a good mix of sizes of re-growth. Species like ash should be left to establish large mature trees.

Photo 5 Loss of stone wall revetment is leading to channel widening. Note the contrast between upstream (background) and downstream (foreground, where the bank revetment is still present on the far bank)

Photo 6 Line of trees established about 25 years ago by BGFA. These provide excellent cover over the water and improve bank stability

Photo 7 The trees are ready for some maintenance work as described above, for example pollarding the willows at the height indicated and leaving as much low cover over the water as possible.

Establishing blocks of trees in strategic locations is the best way to address the problem of accelerated bank erosion. The tree roots will stabilise the bank and provide good habitat in the long term. For this to be successful, the following are important considerations:

- Stands of trees need to be established in the correct locations (i.e. where the river channel is likely to migrate if rapid erosion continues, such as the outside of and downstream of meanders; Appendix 2).
- Blocks of trees are required, not just a single line through which the river could break and continue the rapid rate of erosion.
- Fencing livestock out of the areas where trees are to be established is vital to success. Both banks may need to be fenced if the river can be forded by livestock (see Appendix 1 for guidance on fencing).
- The rate of erosion needs to be slowed in the short to medium term to give trees a chance to establish. This is best achieved by soft revetments, for example using brushwood or log and Christmas trees. These tend to reduce the erosive power of the river and encourage deposition of sediment and consolidation of the bank.

- The aim of the works needs to be clearly explained to landowners and tenants and their agreement secured. Compensation for changes in land use may be available through stewardship schemes.

Consideration should be given to tree management on the stretch upstream of Newfield Bridge where a single line of mature trees grows above stone wall bank revetment on the left bank (Photo 2). These trees tend to lean out over the river as a result of grazing pressure and there will be an increasing risk with time of a tree falling, the stone revetment being breached and rapid bank erosion continuing from that point. Ideally the establishment of a block of trees behind the existing ones would provide a succession into natural bank stability, but in the absence of that a rotational coppice (say on a 10-year cycle or more) would extend the life of the current bank protection; protection of coppice re-growth by fencing out grazing animals would be required.

Further upstream on the right bank are some younger trees planted as part of a habitat improvement scheme (Photo 8). Similar management to that mentioned above for the trees planted by BGFA is recommended (selective coppicing, pollarding and hinging) with a view to improving the amount of low cover over and within the river margins.

At the downstream end of the reach inspected was a length known as the 'canal stretch' which has been fenced and is bounded by water gates across the river (Photo 9). This section represents the ideal in terms of width of riparian zone from which livestock is excluded. Some trees could be established here (for example by pegging willow bundles from trimmings elsewhere in the margins; Photo 10). Narrowing of the river channel by natural encroachment of vegetation is already evident within this section, which is very encouraging.

Downstream of Newfield Bridge and downstream of the Pennine Way footbridge BGFA and the Environment Agency have created some pool habitat by installing vortex weirs (Photo 11). These have been hand-constructed using stone-filled gabion baskets and have largely achieved the desired results of creating downstream scour pools where small trout are now caught. A couple of the structures have failed where the gabions have split and one structure appears to be exacerbating bank erosion (Photo 12).

The vortex weirs are located (correctly) on straight sections of the river and could be improved by providing more low cover alongside the deeper scour pools. Really this technique is best suited to straightened, heavily modified channels and more fishery benefit would accrue from tackling the bank stability issues discussed above, rather than building more vortex weirs.

Further information on habitat management can be found in the Wild Trout Trust's Upland Rivers Habitat Manual, which is available to download at www.wildtrout.org (under the Publications tab). This manual covers the catchment-wide issues facing many rivers and emphasises the need to support organisations such as rivers trusts, government agencies, national parks, wildlife organisations and partnerships in tackling these problems.

Photo 8 Younger trees planted as part of a habitat improvement scheme upstream of Newfield Bridge

Photo 9 The 'canal length'. Removal of grazing pressure is allowing good marginal vegetation to develop here.

Photo 10 Pegging bundles of willow trimmings into the margins in the canal length will improve low cover on this section. Alternate the bundles on opposite sides of the channel.

Photo 11 Vortex weirs. Laying and pegging down some of the willows on the far bank is recommended to encourage low growth alongside the scour pools. This will increase fish holding capacity.

Photo 12 This vortex weir appears to be contributing to bank erosion on the far bank, exposing a redundant pipe. Removal of the weir is probably the best option.

5.0 Recommendations

Activity	Location(s)	Cost	Achievable by
Maintenance on the younger trees (planted in the last 25 years)	• Upstream of Newfield Bridge (Photo 8) • Downstream of Newfield Bridge (blocks planted by BGFA) • Alongside vortex weirs below footbridge (Photo 11)	Volunteer labour	BGFA working party
Propagate new willow growth using trimmings from above maintenance	• At low levels within existing blocks of planting • Pinning bundles in margins in canal length and other places inaccessible to livestock	Volunteer labour	BGFA working party
Remove vortex weir contributing to bank erosion	• Downstream of Newfield Bridge	Volunteer labour	BGFA working party
Strategic planting of blocks of native woodland[1], protected from grazing (by fencing) and short-term erosion (by soft revetment)	• On the outside of bends and in areas vulnerable to accelerated rates of erosion.	• Fencing £6/m • Tree planting approx. £750 /acre • Soft revetment approx. £20/m	Contractor (+ BGFA volunteers)
Fencing of riparian zone wherever possible	• Exclusion of livestock from as wide a margin as negotiable. Use canal length as a template.	• Fencing £6/m • Watergate construction approx. £750 per structure	Contractor

Notes:

1. Check with the Woodland Trust what support may be available for the capital costs of tree planting and the compensation to land managers for change of use. See www.woodlandtrust.org.uk/en/moretrees-moregood/Pages/home.aspx

2. It is a legal requirement that all the works to the river require written Environment Agency (EA) consent prior to undertaking any works, either in-channel or within 8 metres of the bank.

6.0 Making it Happen

The WTT can provide further assistance with help in preparing a project proposal and Land Drainage Act consent applications. A Practical Visit may be available to demonstrate habitat improvement techniques. There is currently a big demand for practical assistance and the WTT has to prioritise exactly where it can deploy its limited resources. The Trust is always available to provide free advice and help to clubs, syndicates and landowners through guidance and linking them up with others that have had experience in improving trout fisheries.

The Wild Trout Trust has two schemes to help clubs raise funds for habitat projects. The Advisory Visit Bursary Scheme provides sums of up to £1500 to recipients of AVs which are to provide seedcorn funding to help secure matched funding from other sources. The Rods for Conservation Scheme can provide a rod from either the Sage or Hardy range to a club for fundraising activities (e.g. auction or raffle) – in order to qualify, a sum of around £1500+ should be expected to be raised. Further advice on fundraising for habitat projects is available on the WTT website at www.wildtrout.org/index.php?option=com_content&task=view&id=157&Itemid=157 .

7.0 Acknowledgement

The Wild Trout Trust would like to thank the Environment Agency for the support which made this visit possible.

8.0 Disclaimer

This report is produced for guidance only and should not be used as a substitute for full professional advice. Accordingly, no liability or responsibility for any loss or damage can be accepted by the Wild Trout Trust as a result of any other person, company or organisation acting, or refraining from acting, upon comments made in this report.

Appendix 1

River-side fencing – guidance (courtesy of Will Cleasby, Eden Rivers Trust). See also WTT Upland Rivers Habitat Manual (www.wildtrout.org Publications)

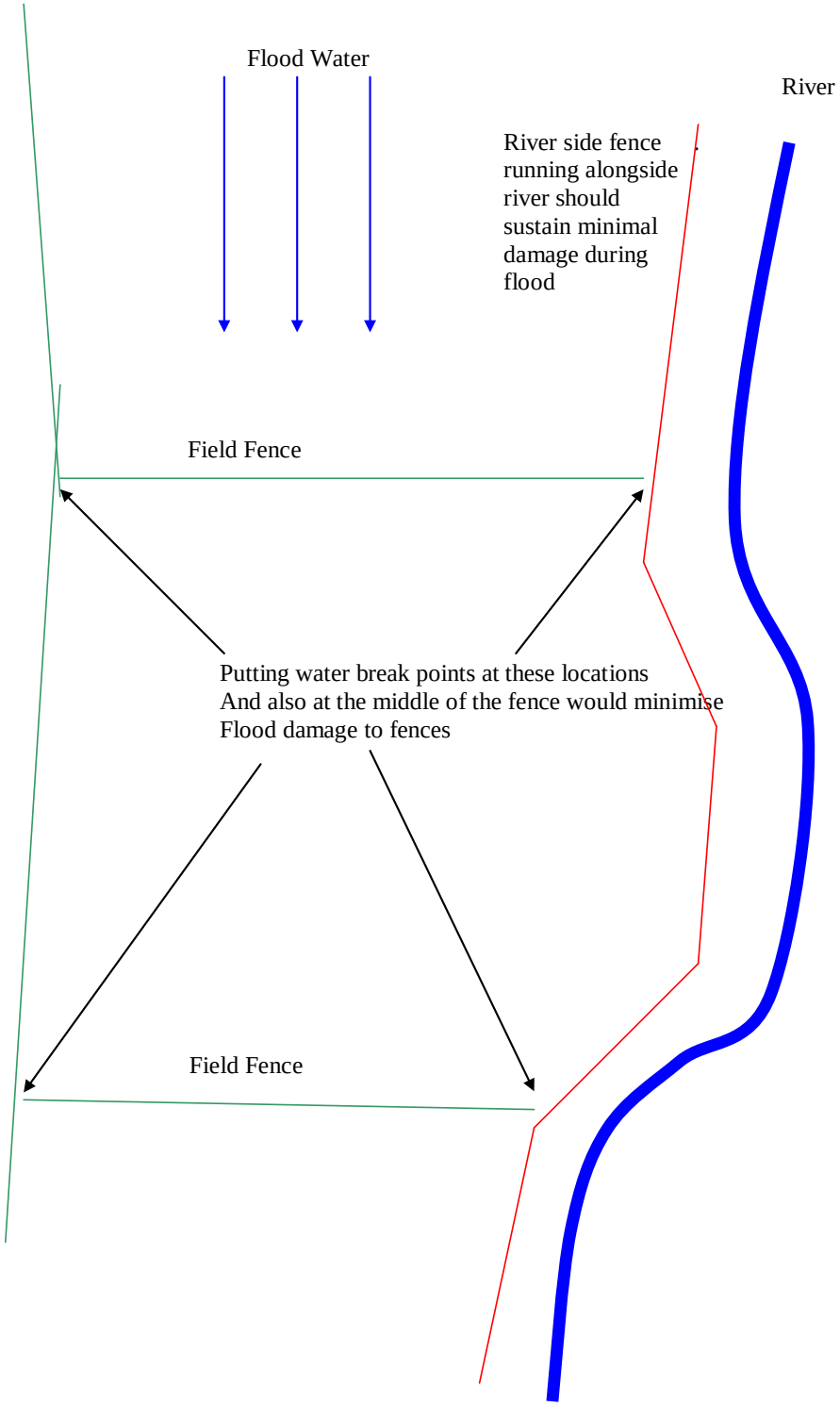

Details for setting up water break points to separate one fence into two

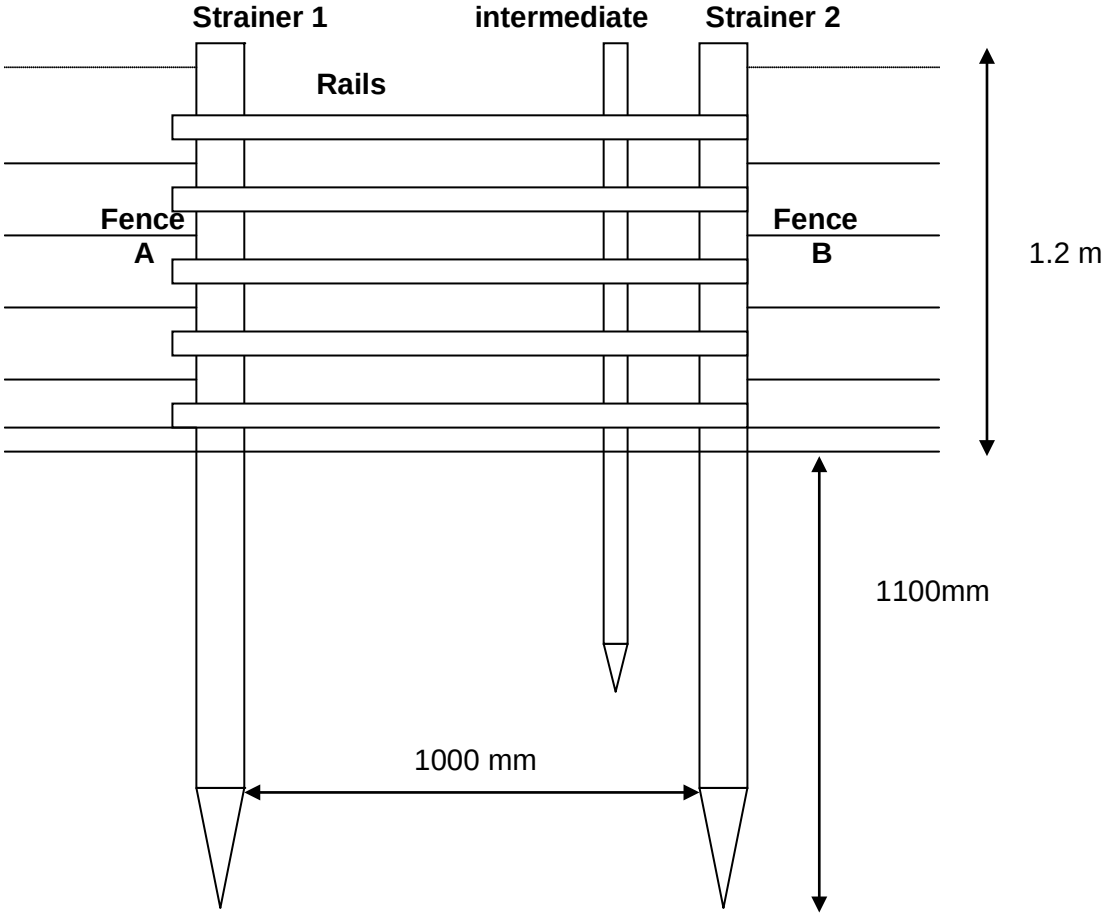

Water Break Point:

- Straining posts 1 and 2 set at approx 1m apart
- Intermediate post set 200mm of strainer 2
- Rails are nailed to strainer 1 and intermediate post
- Rails sit flush to strainer 2 but not attached to it

Example:

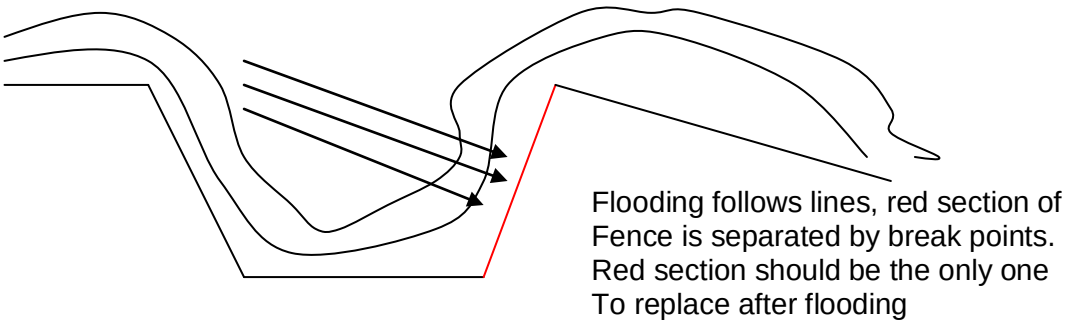

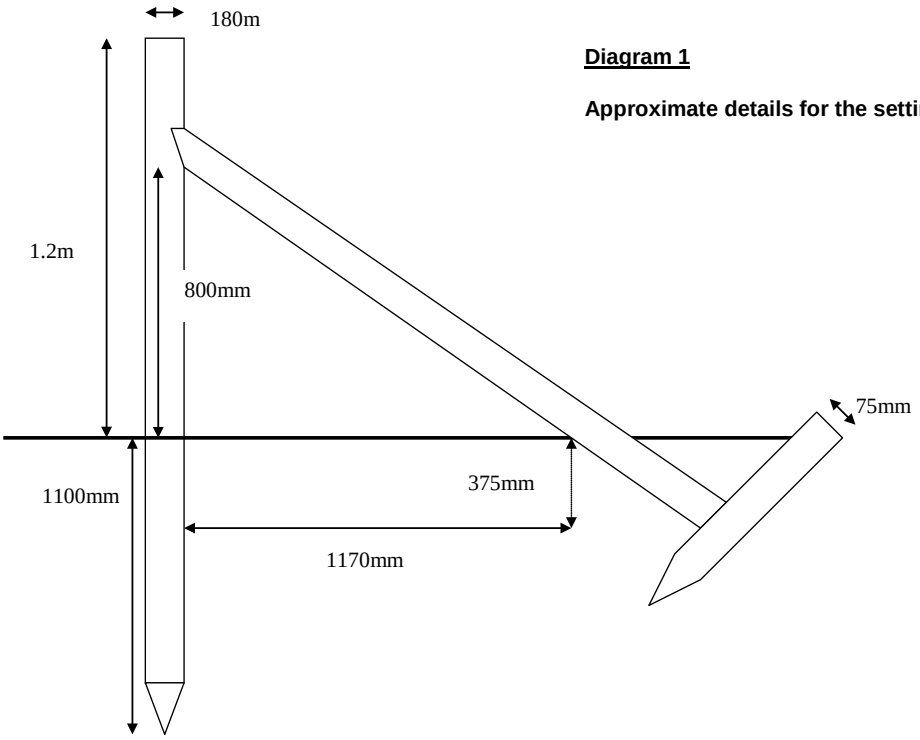

Diagram 1

Approximate details for the setting up of the strainer

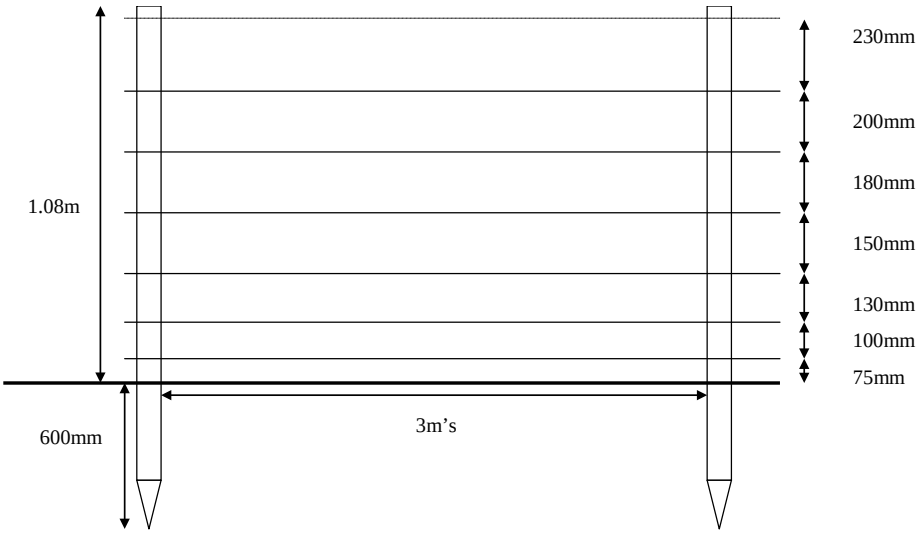

Diagram 1

HIGH TENSILE.

6 STRAND HIGH TENSILE
1 STRAND BARBED WIRE

High tensile wire (diagram 1)

- Shall not be less than 1.06m high from ground to top wire.
- Wire shall be galvanised (BS4102), 3.15 mm diameter.
- Straining Posts shall be 180mm minimum top diameter x 2.4m's to be driven into the ground.
- Strainers to be set at centres not exceeding 50m's.
- Turning posts shall be 155mm top diameter x 2.1m's. May be pointed and driven to 900mm into the ground.
- Struts shall be 120mm dia x 2.1m long and notched into the straining post at an angle no greater than 45 degrees. Allow two struts for strainer/turner where angle is less than 135 or one bisecting the angle where the internal angle is greater than 135.
- Intermediate post shall be 75 - 100mm dia x 1700mm to be driven to 450mm. To be set at no more than 3 m intervals.
- Galvanised steel radisseurs to be used to tighten strands.

Appendix 2 Examples of habitat improvement techniques mentioned in the report.

- Examples of fencing projects – before and after

River Eden, Crackenthorpe, November 1998

River Eden, Crackenthorpe, July 2002

River Eden, Barrowmoor, October 1999

River Eden, Barrowmoor, August 2000

Pictures courtesy of Eden Rivers Trust

- Introducing low cover by laying willows

Partial cutting and laying of willow (like hedge laying) is a quick way of creating low cover which is firmly fixed to the bank. The willow should root along its length.

- Coppicing trees

Coppicing trees produces bushy re-growth which creates excellent low cover over the water (if protected from grazing) but doing it all in one go like this produces a uniform size of trees. Better to adopt a rotational coppice to increase variety. The lower picture represents 4 years re-growth (River Dane, Cheshire/Staffs.)

- Strategic tree planting

Stylised diagram of fencing and tree planting to increase the resistance of banks to erosion in the areas on the outside of and downstream of meanders. Soft revetment to allow time for trees to establish.

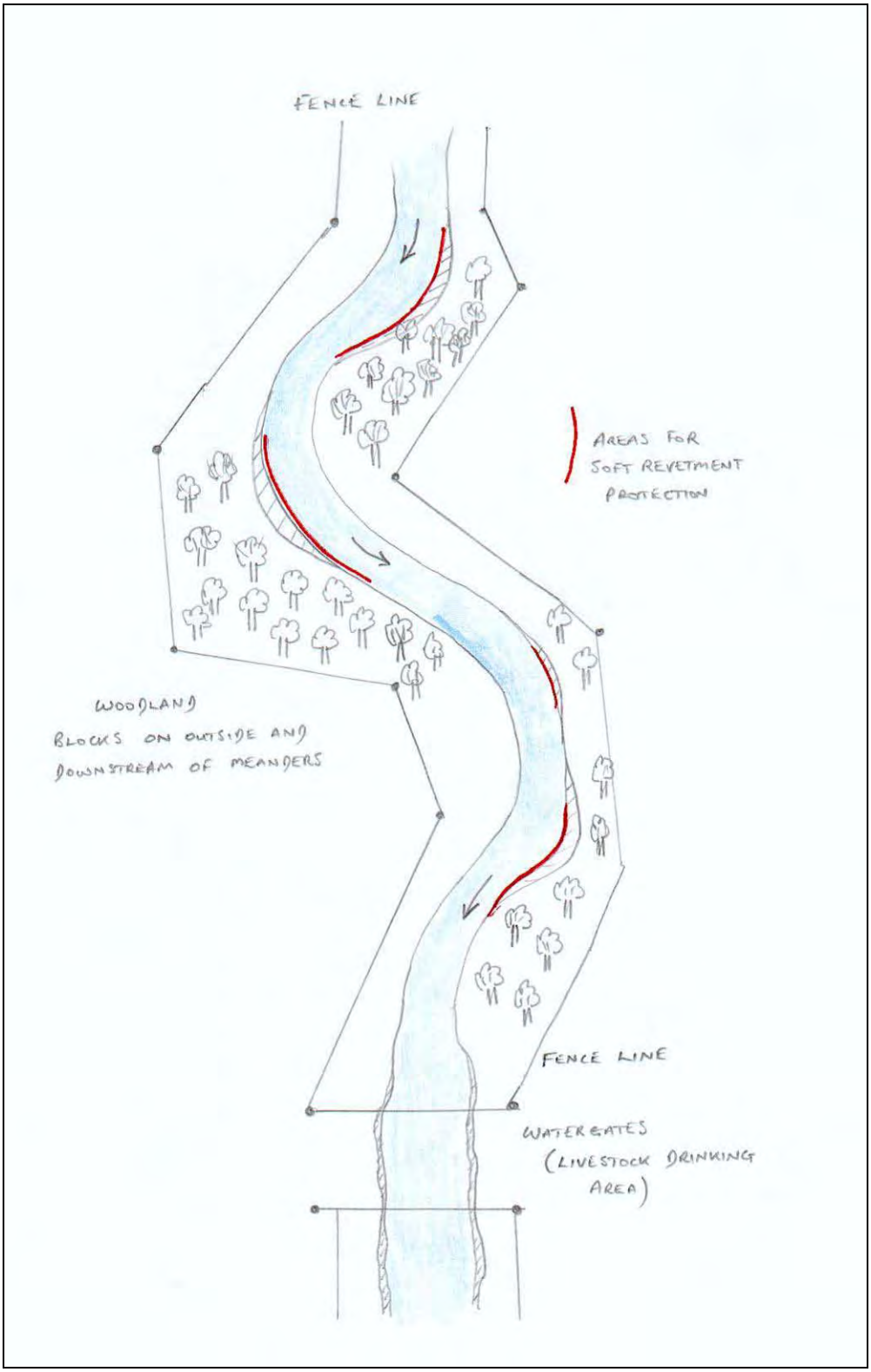

- Soft revetment. This technique is not only suitable for reducing excessive erosion rates but provides superb juvenile salmonid habitat.

Afon Dulas (before)

Afon Dulas (after). A Wye & Usk Foundation project. (Photos courtesy of Simon Evans)

Conifer top revetment against an eroding bank on the River Manifold, Staffs. Note wide fenced adjacent margin which has also been planted with willow slips.